INDEX OF DRAWINGS POWERSERVE UK LIMITED

Drawing No	OEM	Replacement Parts Description	Suitable for Equipment
P100900	AEI/Met Vickers	T/C Diverter & Selector Switch Contacts	M21 & 2M21
P100901	AEI/Met Vickers	T/C Diverter Switch Contacts	M31, M32, M51, M52, M54 & M56
P100903	AEI/Met Vickers	T/C Diverter Switch Contacts	M102 & M103
P100905	AEI/Met Vickers	Switchgear Contacts	JB621, JB721, JB821 & JB921
P100908	AEI/Met Vickers	T/C Diverter Switch Contacts	S21
P100909	AEI/Met Vickers	T/C Diverter Switch Contacts	LBT, LBTC,11LBT & LBTR
P100910	AEI/Met Vickers	Switchgear Contacts	JB424
P100912	AEI/Met Vickers	Switchgear Contacts	JB426 & JB427
P100914	AEI/Met Vickers	T/C Diverter & Selector Switch Contacts	S21
P100917	AEI/Met Vickers	Gaskets	ME501
P117900	Allen West/BET	T/C Diverter Switch Contacts	Various
P117901	Allen West/BET	T/C Diverter Switch Contacts	Various
P117902	Allen West/BET	Oil Tight Gland Refurbishment Kit	LS
P117903	Allen West/BET	Maintaining Switch Contacts	LS
P140900	Brush	Switchgear Contacts & Gauges	VSI, VTD & VB
P140917	Brush	Contacts, Flexes & Buffers	HSR
P140918	Brush	Switchgear Contacts & Gauge	VB
P140920	Brush	Contacts, Flexes, Glass Tubes	HSR
P160901	BTH	Contact	MF54
P160902	BTH	T/C Contacts	ATC
P179904	Crompton Parkinson	Switchgear Contacts	ALA & ALB
P179905	Crompton Parkinson	Switchgear Contacts	OE5
P185901	Cooke & Ferguson	Switchgear Contacts	OF5
P194900	Cutler Hammer	Contacts	Various
P255900	Ellisson	Switchgear Contacts	
P259900	English Electric	Switchgear Contacts	OLX
P259902	English Electric	Switchgear Contacts	OKM4
P259907	English Electric	T/C Diverter Switch Contacts	Various
P259911	English Electric	T/C Diverter Switch Contacts	Various
P259912	English Electric	T/C Selector Parts	Reactor T/C
P259913	English Electric	Gaskets	Reactor T/C
P259914	English Electric	T/C Diverter Contacts	FDA & FDB
P259915	English Electric	T/C Diverter Contacts	FDC & FDD
P300905	Fuller/ATL	T/C Contacts and Gaskets	AT
P300906	Fuller/ATL	T/C Fixed Selector Contacts	F
P300907	Fuller/ATL	Selector Parts, Gaskets, Braid & Resistors	F
P300908	Fuller/ATL	T/C Contacts	ASD
P300909	Fuller/ATL	T/C Diverter Switch Contacts	HS & AMD
P300914	Fuller/ATL	Bushings	HS, AMD, HD & ASD
P300915	Fuller/ATL	'Mushroom' Fixed & Moving Contacts	EH, HD, H
P300917	Fuller/ATL	T/C Contacts	FBA
P300920	Fuller/ATL	Sight Glasses & Various	Various
P300922	Fuller/ATL	Stress Shields	HS
P300923	Fuller/ATL	Moulded OCTS Selector Stud	HCO
P300924	Fuller/ATL	Transition Resistor Assembly	AT
P300925	Fuller/ATL	Refurbishment of Centrifugal Switches	H & EH
P300926	Fuller/ATL	Lead Screws for Selector Switches	H & EH
P300927	Fuller/ATL	Gaskets	HS 33Kv
P300928	Fuller/ATL	Diverter Switch Contact Holders	H, EH & HD
P300929	Fuller/ATL	Refurbishment of Direction Seq Switches	Various
P300930	Fuller/ATL	Microswitch Retrofit Kit	AT/AE
P300931	Fuller/ATL	Gaskets	HS 66Kv
P301900	Ferranti	T/C Contacts & Gaskets	FC4,DC3 & DC5
P301903	Ferranti	T/C Contacts	Rotary
P301904	Ferranti	T/C Contacts & Studs	DS2, DS5, ES3
P301905	Ferranti	Gaskets,Sight Glasses & Counters	DS2
P301906	Ferranti	T/C Contacts	FC6,FL12,CG6,12,HR6,14,18,HD12
P301909	Ferranti	Gaskets & Sight Glasses	ES
P301910	Ferranti	Selector Mouldings	Various
P301911	Ferranti	Sight Glasses & Gaskets	DS5
P301912	Ferranti	T/C Contacts & Arm	FC6
P301914	Ferranti	Diverter Contacts	FC6
P301916	Ferranti	Sight Glasses & Gaskets	DS300

INDEX OF DRAWINGS POWERSERVE UK LIMITED

Drawing No	OEM	Replacement Parts Description	Suitable for Equipment
P340901	GEC	Switchgear Contacts & Assys	BVRP17
P340916	GEC	Tapchanger Contacts	Reactor T/C
P340917	GEC	Switchgear Contacts	OFA12, OD10A & KNA
P340922	GEC	Tapchanger Contacts	Type J
P340923	GEC	Switchgear Contacts	BVRP
P340924	GEC	Sight Glass Kit	
P340925	GEC	Tapchanger Contacts	SD
P340926	GEC	Switchgear Contacts	OFA11
P340927	GEC	Switchgear Contacts	OD11
P340928	GEC	Isolator Head Parts and Refurbishment	GD2D
P340929	GEC	Switchgear Contacts	KB
P340930	GEC	Switchgear Contacts	VLP9
P379900	Hackbridge	Contacts	XCO33
P380900 to 902	Hamworthy	Rubber Seals & Gaskets for Compressor	
P380903	Hamworthy	Refurbishment of One Way Valves	
P440900	Jansen	Contacts	C111
P443902	Johnson & Phillips	Switchgear Contacts	M660
P480903	Long & Crawford	Gasket	T3GF3
P480904	Long & Crawford	Gasket	ETV2
P520902	AEI/Met Vickers	Switchgear Contacts	V1R/H1R
P520905	AEI/Met Vickers	Tapchanger Contacts	LCT
P520906	AEI/Met Vickers	Switchgear Contact	SB28/X
P558901		Off Circuit Tap Selector	
P558905	Various	Rubber Bobbin Mounts	
P558912	Various	Valve Refurbishment Parts	
P558913	Various	Fixed Contact Assembly	MTG2
P558916	Various	Oil Level Indicators	
P558917	Various	Oil Level Glasses & Gauges	
P558918	Various	Oil Sight Glasses	
P558919	Various	Tapchanger Counter Replacements	
P558920	Various	Fuse Box Bushing	
P558921	Various	Oil Level Glasses	
P558922	Various	Oil Sight Glass and Gasket	
P558923	Various	Sight Glass, Washer and Seal	
P558924	Various	Sheilds and Plates	
P669903	Reyrolle	Switchgear Contacts & Assys	LMT - 400Amp
P669904	Reyrolle	Switchgear Contacts & Assys	LMT - 1200Amp
P669911	Reyrolle	Switchgear Contacts & Assys	C6T
P669913	Reyrolle	Switchgear Contacts & Assys	C Series
P669918	Reyrolle	Switchgear Contacts & Assys	L42T
P669919	Reyrolle	Switchgear Contacts & Assys	L800T
P669920	Reyrolle	Switchgear Contacts & Assys	OYT
P669921	Reyrolle	Switchgear Contacts & Assys	LA23T
P669923	Reyrolle	Switchgear Contacts & Assys	LMT2/X3 630A
P669924	Reyrolle	Arcing Contact Lever	11S3GA
P669925	Reyrolle	Isolating Cluster	LMT
P669929	Reyrolle	Piston,Pltes,Gaskets & Seals	OBYR
P669931	Reyrolle	Valve Seals	OBYR
P669932	Reyrolle	Gaskets	JS, JK &JKSS
P669933	Reyrolle	Switchgear Vent Block	L1000
P669934	Reyrolle	Switchgear Contacts & Assys	LMT2 1200A
P710900	South Wales	Switchgear Contacts & Assys	C Series
P710905	South Wales	Switchgear Contacts & Assys	D4
P710906	South Wales	Switchgear Contacts & Assys	D Series
P710917	South Wales	Switchgear Contacts & Assys	EO1 (400 & 800A)
P710920	South Wales	Switchgear Contacts & Assys	EO1 (1600A)
P710921	South Wales	Switchgear Contacts & Assys	EM12
P712902	Switchgear & Cowan	Switchgear Contacts & Assys	A51
P712903	Switchgear & Cowan	Switchgear Contacts & Assys	A71
P712905	Switchgear & Cowan	Switchgear Contacts & Assys	A4
P715903	J.G Statter	Switchgear Contacts & Assys	AC1
P715904	J.G Statter	Support Boards	ACO1
P715905	Various	Fuse Switch Modification Parts	TYKE Iia & FSA
P715906	J.G Statter	Gasket	OD, SA & VL
P715907	J.G Statter	Sight Glasses & Gaskets	VL
P830901	William & James	1st & 2nd Stage Valve Plate Assys	
P872901	Yorkshire Switchgear	Switchgear Contacts	IVIF13
P872902	Yorkshire Switchgear	Switchgear Contacts	So-Hi
P872903	Yorkshire Switchgear	Sight Glass Details	

TO CONTACT US - TEL: +44(0)1279-418630 WEB: www.powerserveuk.com EMAIL: info@powerserveuk.com

All information contained in this document is confidential and the copyright reserved

Used on dwg MANUAL

P100900

Quantity D	Quantity C	Quantity B	Quantity A	No	Description	Detail No		OEM Part No
		12		1	FIXED DIVERTER CONTACT	P100001/A		
		12	24	2	DIVERTER CONTACT	P100002/A		
				3	FIXED SELECTOR CONTACT	P100049/1		
				4	MOVING SEL CONTACT ASSY	P100047/A		
				5	MOVING SEL CONTACT FINGER	P100047/1		

GROUP A = M21

GROUP B = 2M21 WITH FIXED CONTACT P100001/A AND MOVING CONTACT P100002/A

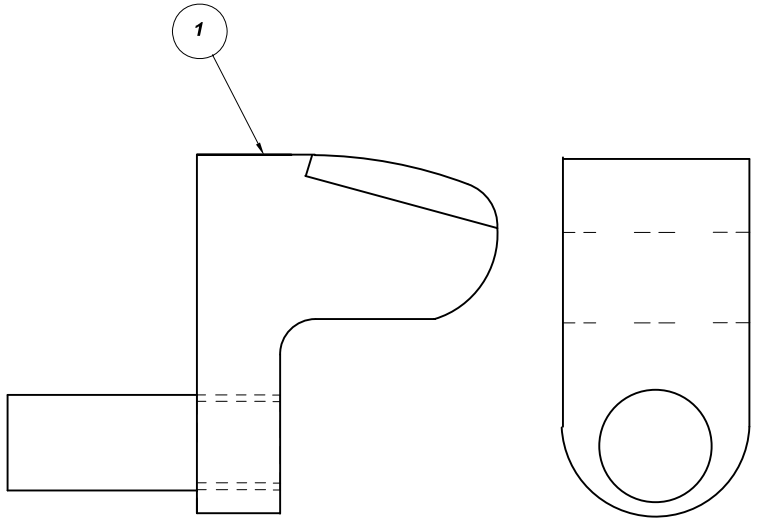

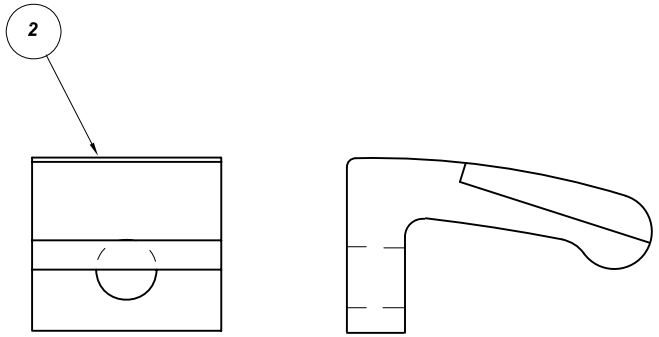

SPRINGS AND SCREWS NOT SHOWN

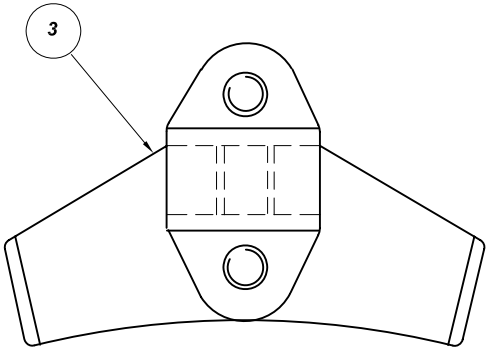

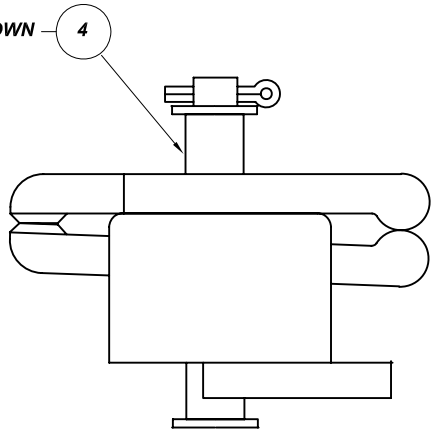

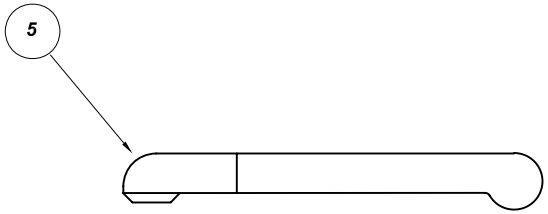

No	Revision notes	Date/Sig	No	Revision notes	Date/Sig	No	Revision notes	Date/Sig

Powerserve UK Limited

SERVING ELECTRICAL UTILITIES

TO CONTACT US
TEL: +44(0)1279-418630
FAX: +44(0)1279-210097
WEB: www.powerserveuk.com
EMAIL: info@powerserveuk.com

Scale NTS | Drawn ACS | Checked AJT | Approved AJT | Date 25/02/10

PATTERN DIV & SEL SWITCH CONTACTS FOR AEI TYPE M21 & 2M21 TAPCHANGERS

RE No P100900

Sheet No

REV 0

TO CONTACT US - TEL: +44(0)1279-418630 WEB: www.powerserveuk.com EMAIL: info@powerserveuk.com

All information contained in this document is confidential and the copyright reserved

Used on dwg MANUAL

P100901

Quantity D	Quantity C	Quantity B	Quantity A	No	Description	Detail No	Nat Com Code	OEM Part No
		24	24	1	FIXED/MOVING CONTACT	P100009/A	35-37-883	C4244164 item 1
			12	2	FIXED/MOVING CONTACT	P100010/A	35-37-884	C4244164 item 2
				3	SELECTOR COVER GASKET	P100053/1		
				4	DIVERTER GASKET	P100053/2		
				5	SELECTOR INSP COVER GASKET	P100053/3		

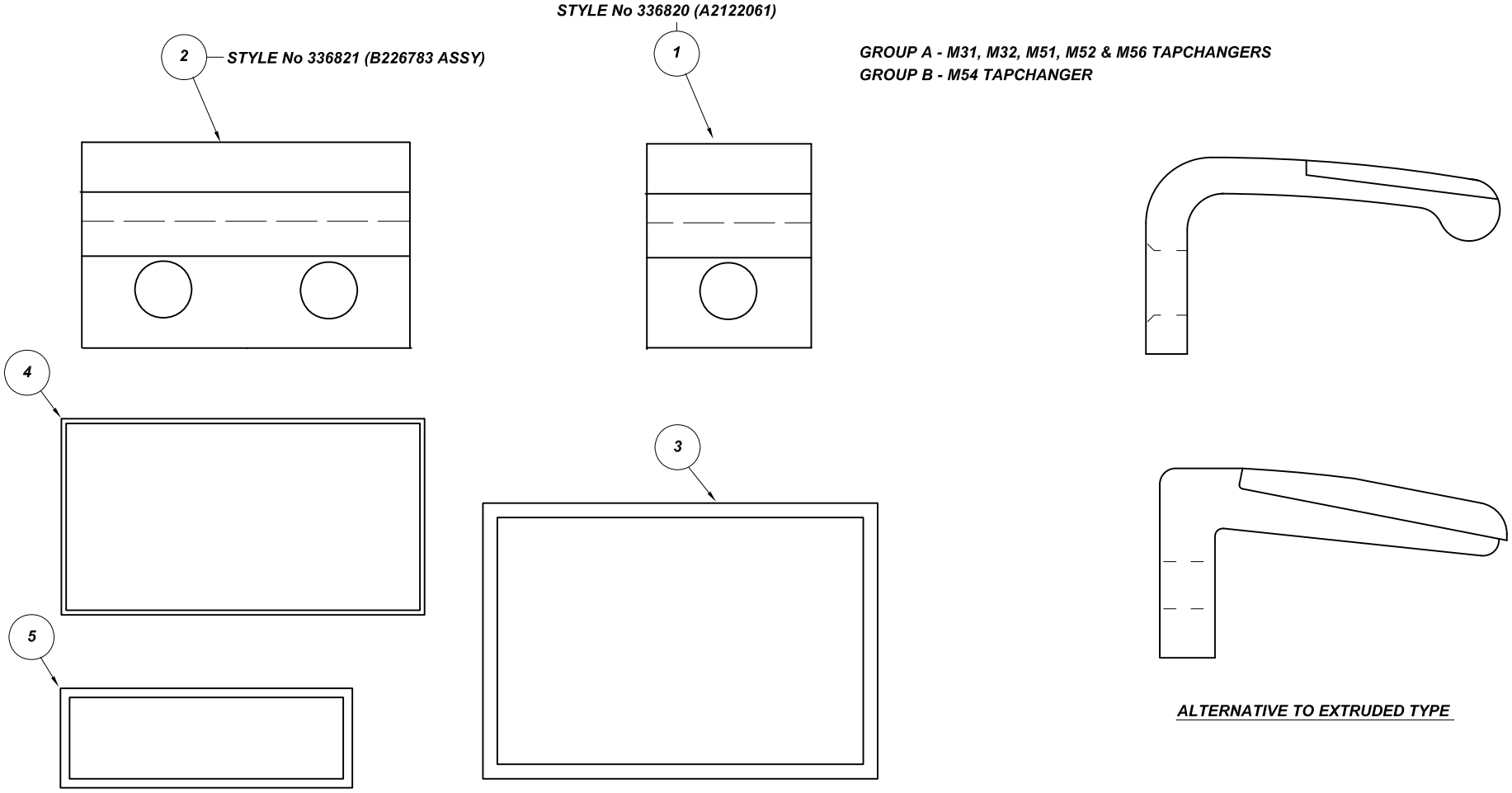

GROUP A - M31, M32, M51, M52 & M56 TAPCHANGERS
GROUP B - M54 TAPCHANGER

ALTERNATIVE TO EXTRUDED TYPE

No	Revision notes	Date/Sig	No	Revision notes	Date/Sig	No	Revision notes	Date/Sig

Powerserve UK Limited
SERVING ELECTRICAL UTILITIES

TO CONTACT US
TEL: +44(0)1279-418630
FAX: +44(0)1279-210097
WEB: www.powerserveuk.com
EMAIL: info@powerserveuk.com

Scale NTS | Drawn ACS | Checked AJT | Approved AJT | Date 25/02/10

PATTERN CONTACTS FOR TYPE M31, M31, M51, M52 M54 & M56 TAPCHANGERS

RE No P100901 REV 0

Sheet No

TO CONTACT US - TEL: +44(0)1279-418630 WEB: www.powerserveuk.com EMAIL: info@powerserveuk.com

All information contained in this document is confidential and the copyright reserved

Used on dwg MANUAL

P100903

Quantity D	Quantity C	Quantity B	Quantity A	No	Description	Detail No	Nat Com Code	OEM Part No
				1	FIXED AND MOVING CONTACT	P100042/A	35-37-881	B3261304 Item 1

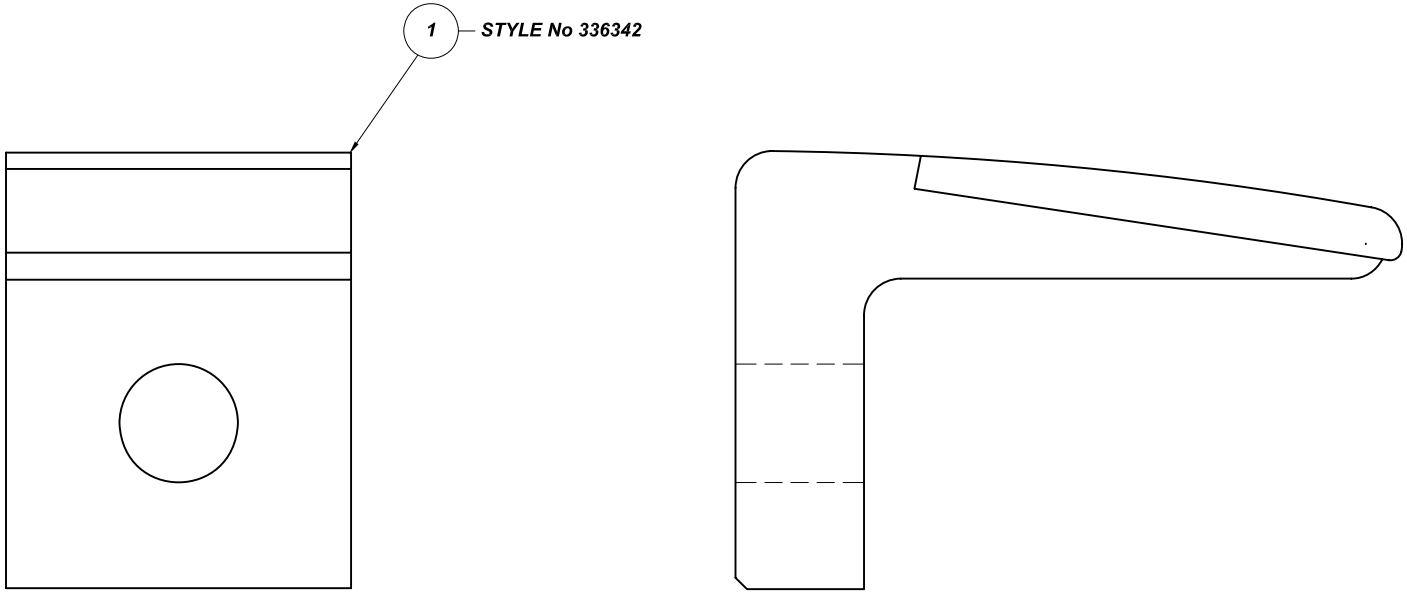

No	Revision notes	Date/Sig	No	Revision notes	Date/Sig	No	Revision notes	Date/Sig

Powerserve UK Limited
SERVING ELECTRICAL UTILITIES

Scale NTS Drawn ACS Checked AJT Approved AJT Date 25/02/10

TO CONTACT US
TEL: +44(0)1279-418630
FAX: +44(0)1279-210097
WEB: www.powerserveuk.com
EMAIL: info@powerserveuk.com

PATTERN CONTACTS FOR AEI/MET VICK M102 & M103 TAPCHANGERS

RE No P100903 REV 0

Sheet No

Form No 3-7.3.6-A3 Rev B

TO CONTACT US - TEL: +44(0)1279-418630 WEB: www.powerserveuk.com EMAIL: info@powerserveuk.com

All information contained in this document is confidential and the copyright reserved

Used on dwg MANUAL

P100905

Quantity D	Quantity C	Quantity B	Quantity A	No	Description	Detail No		OEM Part No
				1	MOVING CONTACT-JB621/721 CM1	P100031/A		
				2	MOVING CONTACT-JB821 CM1	P100033/A		
				3	MOVING CONTACT-JB921 CM12	P100028/A		

FOR JB424 SEE DRAWING P100910

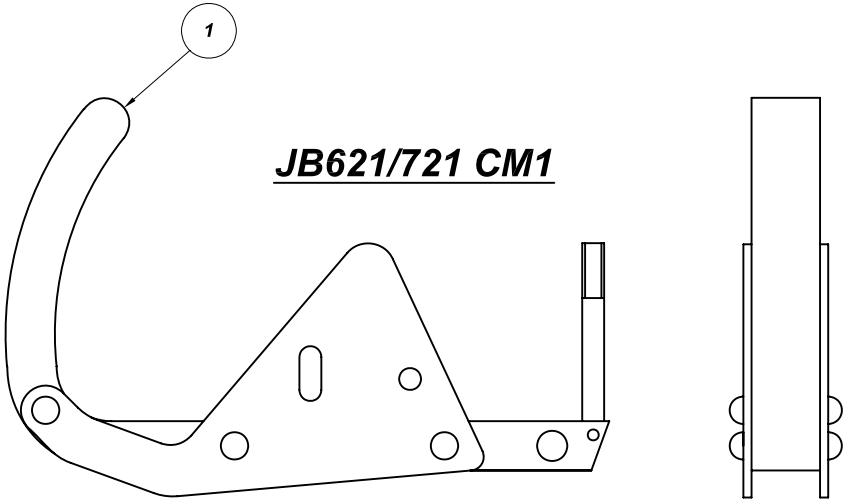

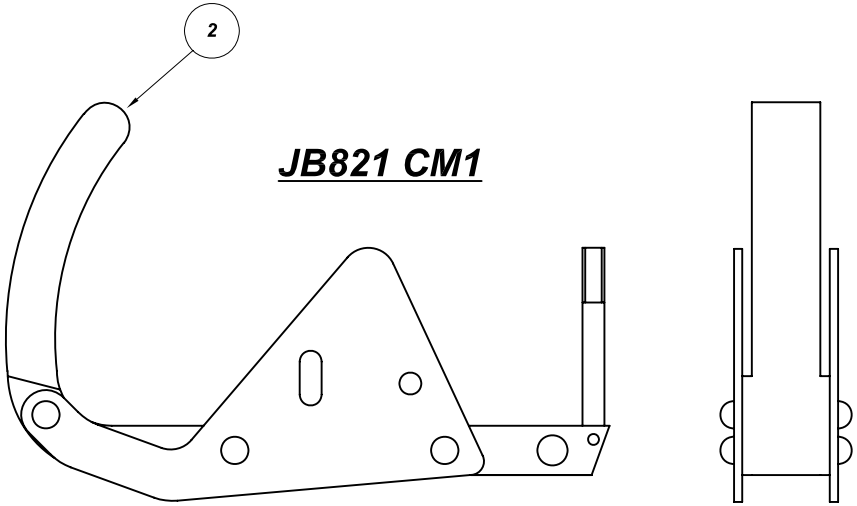

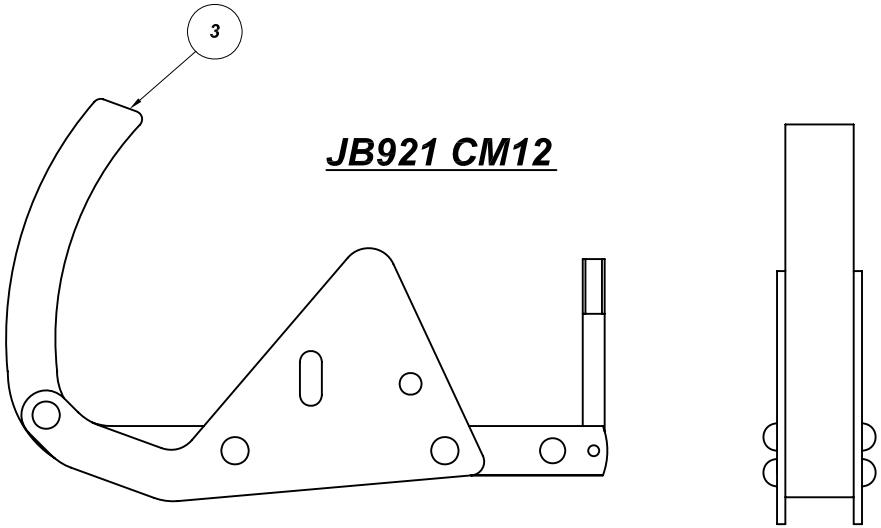

No	Revision notes	Date/Sig	No	Revision notes	Date/Sig	No	Revision notes	Date/Sig

Powerserve UK Limited
SERVING ELECTRICAL UTILITIES

Scale NTS Drawn ACS Checked AJT Approved AJT Date 25/02/10

TO CONTACT US
TEL: +44(0)1279-418630
FAX: +44(0)1279-210097
WEB: www.powerserveuk.com
EMAIL: info@powerserveuk.com

PATTERN MOVING CONTACTS FOR ENGLISH ELECTRIC TYPES JB621/721, JB821 & JB921 SWGR

RE No P100905 REV 0

Sheet No

TO CONTACT US - TEL: +44(0)1279-418630 WEB: www.powerserveuk.com EMAIL: info@powerserveuk.com

All information contained in this document is confidential and the copyright reserved

Used on dwg MANUAL

P100908

NOTE - 102 FIXED CONTACTS (DETAIL 3) ARE REQUIRED FOR A FULL SET OF REPLACEMENTS, HOWEVER THIS CAN BE REDUCED BY MOVING CONTACTS FROM OUTSIDE TO THE INSIDE

Quantity				No	Description	Detail No		OEM Part No
D	C	B	A					
		6	6	1	MOVING CONTACT (UPPER)	P100005/A		
		6	6	2	MOVING CONTACT (LOWER)	P100005/B		
		As Req		3	FIXED CONTACT	P100004/A		

GROUP A - SET OF MOVING CONTACTS
GROUP B - SET OF MOVING CONTACTS PLUS FIXED CONTACTS (AS REQUIRED) - SEE NOTE.

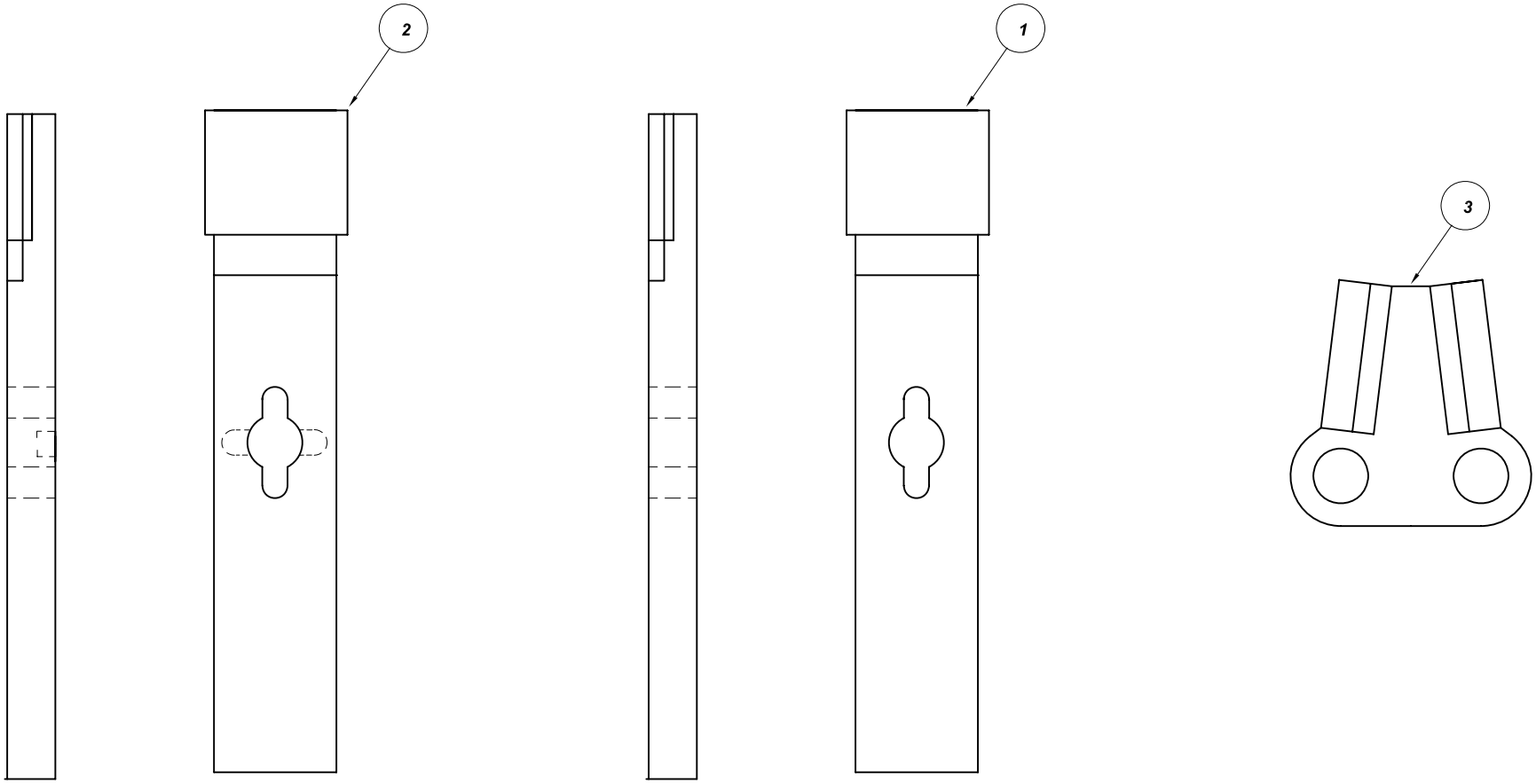

No	Revision notes	Date/Sig	No	Revision notes	Date/Sig	No	Revision notes	Date/Sig

Powerserve UK Limited
SERVING ELECTRICAL UTILITIES

TO CONTACT US
TEL: +44(0)1279-418630
FAX: +44(0)1279-210097
WEB: www.powerserveuk.com
EMAIL: info@powerserveuk.com

PATTERN FIXED AND MOVING CONTACTS FOR AEI S21 AX2T TAPCHANGER

Scale NTS | Drawn ACS | Checked AJT | Approved AJT | Date 25/02/10

RE No | Sheet No | P100908 | REV 0

TO CONTACT US - TEL: +44(0)1279-418630 WEB: www.powerserveuk.com EMAIL: info@powerserveuk.com

All information contained in this document is confidential and the copyright reserved

Used on dwg MANUAL

P100909

Quantity D	Quantity C	Quantity B	Quantity A	No	Description	Detail No	Nat Com Code	OEM Part No
				1	MOVING CONTACT ASSEMBLY	P100045/A	35-37-894	D5392563
				2	FIXED CONTACT ASSEMBLY	P100046/B		
				3	FIXED CONTACT ASSEMBLY	P100046/A	35-37-895	D5392227
				4	MOVING CONTACT ASSEMBLY	P100045/B		
				5	MOVING CONTACT ASSEMBLY	P100045/C		
				6	MOVING CONTACT ASSEMBLY	P100045/D		
				7	MOVING CONTACT ASSEMBLY	P100045/E		
				8	MOVING CONTACT ASSEMBLY	P100045/F		
				9	MOVING CONTACT ASSEMBLY	P100045/G		
				10	MOVING CONTACT ASSEMBLY	P100045/H		
				11	FIXED CONTACT ASSEMBLY	P100046/C		

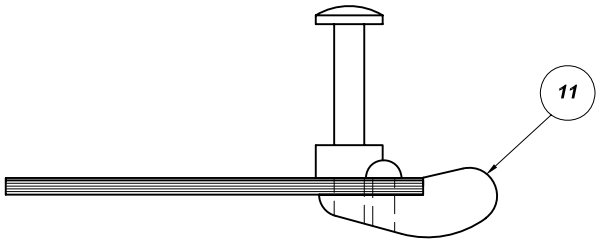

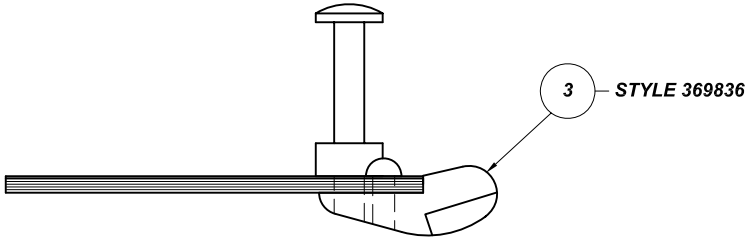

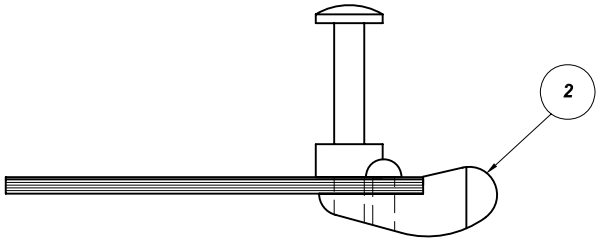

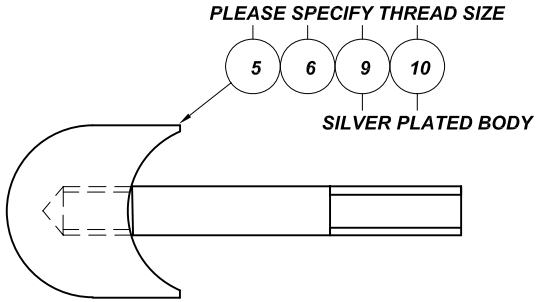

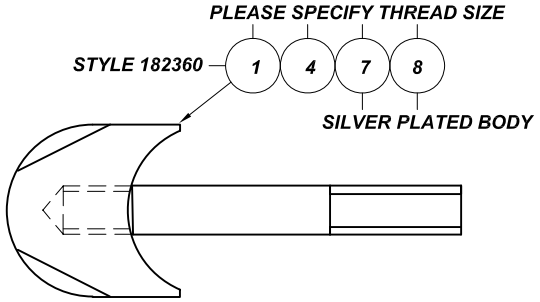

No	Revision notes	Date/Sig	No	Revision notes	Date/Sig	No	Revision notes	Date/Sig

Powerserve UK Limited
SERVING ELECTRICAL UTILITIES

TO CONTACT US
TEL: +44(0)1279-418630
FAX: +44(0)1279-210097
WEB: www.powerserveuk.com
EMAIL: info@powerserveuk.com

PATTERN FIXED AND MOVING CONTACTS FOR AEI/MET VICK LBT, LBTC, 11LBT & LBTR T/C'S

Scale NTS | Drawn ACS | Checked AJT | Approved AJT | Date 25/02/10

RE No | Sheet No | P100909 | REV 0

TO CONTACT US - TEL: +44(0)1279-418630 WEB: www.powerserveuk.com EMAIL: info@powerserveuk.com

All information contained in this document is confidential and the copyright reserved

Used on dwg MANUAL

P100910

Quantity D	Quantity C	Quantity B	Quantity A	No	Description	Detail No		OEM Part No
			3	1	FIXED CONTACT FINGER SET	P100025/A		
			3	2	MOVING CONTACT ASSEMBLY	P100026/A		

SEE DRAWING P100905 FOR OTHER JB SERIES MOVING CONTACTS

GROUP A - ONE SET OF FIXED AND MOVING CONTACTS

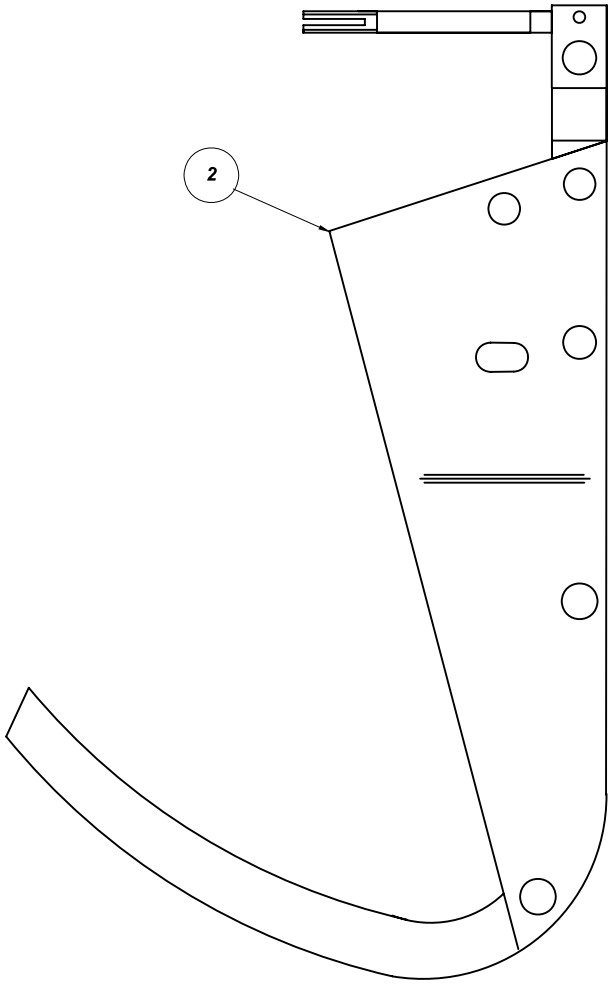

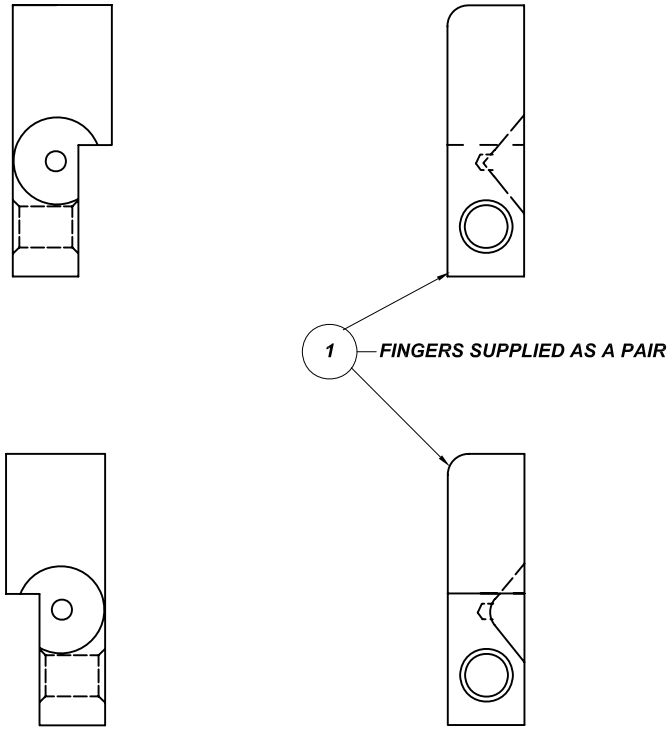

No	Revision notes	Date/Sig	No	Revision notes	Date/Sig	No	Revision notes	Date/Sig

Powerserve UK Limited
SERVING ELECTRICAL UTILITIES

TO CONTACT US
TEL: +44(0)1279-418630
FAX: +44(0)1279-210097
WEB: www.powerserveuk.com
EMAIL: info@powerserveuk.com

PATTERN FIXED AND MOVING CONTACTS FOR AEI TYPE JB424 WM3 SWITCHGEAR

Scale NTS | Drawn ACS | Checked AJT | Approved AJT | Date 25/02/10

RE No: P100910 | REV: 0

Sheet No

TO CONTACT US - TEL: +44(0)1279-418630 WEB: www.powerserveuk.com EMAIL: info@powerserveuk.com

All information contained in this document is confidential and the copyright reserved

Used on dwg MANUAL

P100912

Quantity D	Quantity C	Quantity B	Quantity A	No	Description	Detail No		OEM Part No
				1	MOVING CONTACT - JB426	P100029/1		
				2	FIXED CONTACT FINGER - JB426	P100030/1		
				3	MOVING CONTACT - JB427	P100029/2		
				4	FIXED CONTACT FINGER - JB427	P100036/1		

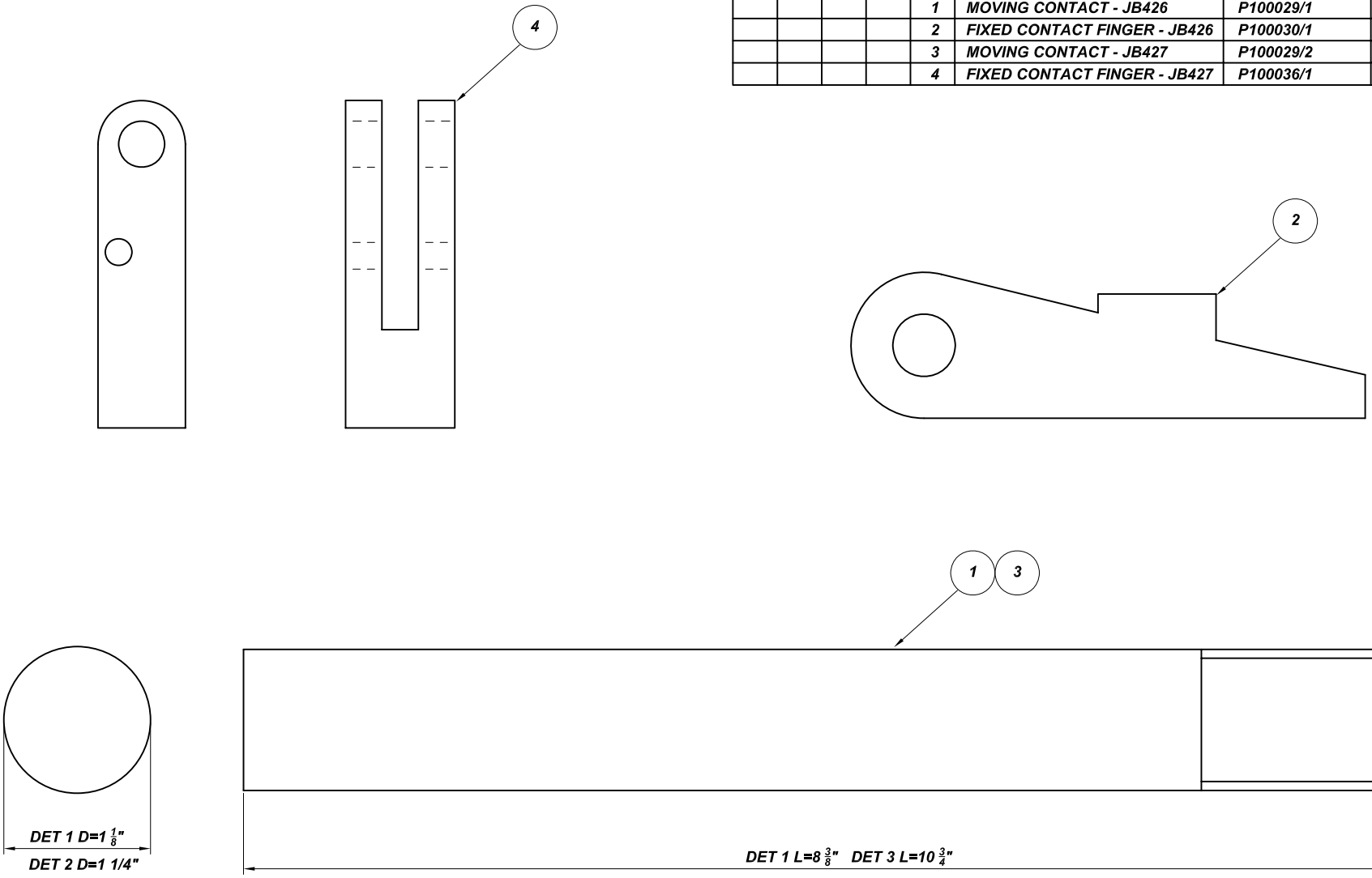

No	Revision notes	Date/Sig	No	Revision notes	Date/Sig	No	Revision notes	Date/Sig

Powerserve UK Limited
SERVING ELECTRICAL UTILITIES

TO CONTACT US
TEL: +44(0)1279-418630
FAX: +44(0)1279-210097
WEB: www.powerserveuk.com
EMAIL: info@powerserveuk.com

PATTERN PARTS FOR AEI TYPE JB426 AND JB427 SWITCHGEAR

Scale NTS | Drawn ACS | Checked AJT | Approved AJT | Date 25/02/10

RE No P100912 | REV 0

Sheet No

TO CONTACT US - TEL: +44(0)1279-418630 WEB: www.powerserveuk.com EMAIL: info@powerserveuk.com

All information contained in this document is confidential and the copyright reserved

Used on dwg MANUAL

P100914

Quantity D	Quantity C	Quantity B	Quantity A	No	Description	Detail No		OEM Part No
			6	1	CONTACT RING	P100041/1		
			6	2	CONTACT	P100041/2		
			6	3	CONTACT	P100041/3		
			6	4	CONTACT BAR	P100041/4		
				5	RUBBER BUFFER-FIXED CONTACT	P100043/1		

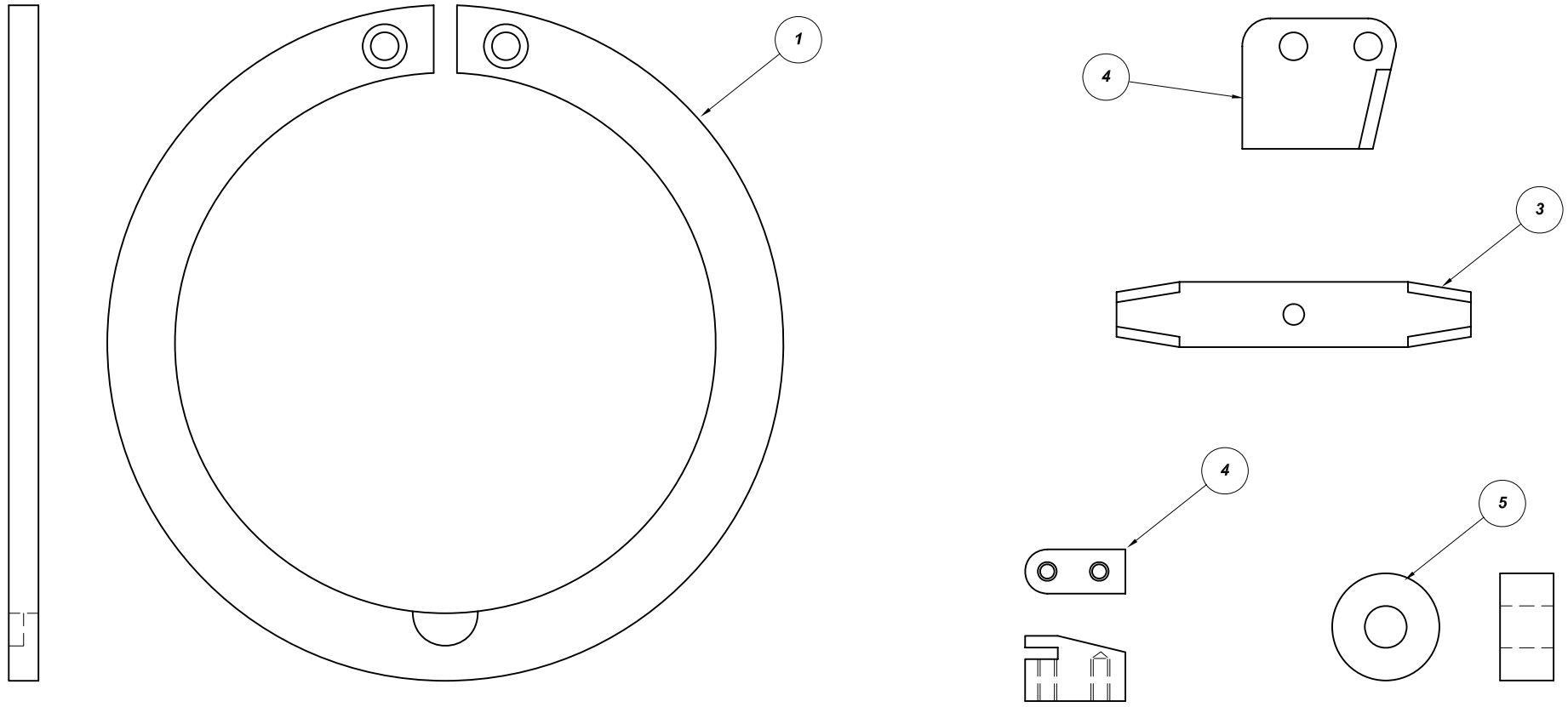

No	Revision notes	Date/Sig	No	Revision notes	Date/Sig	No	Revision notes	Date/Sig

Powerserve UK Limited
SERVING ELECTRICAL UTILITIES

TO CONTACT US
TEL: +44(0)1279-418630
FAX: +44(0)1279-210097
WEB: www.powerserveuk.com
EMAIL: info@powerserveuk.com

PATTERN CONTACT PARTS FOR TYPE S21 TAPCHANGER

Scale NTS | Drawn ACS | Checked AJT | Approved AJT | Date 25/02/10

RE No | Sheet No | P100914 | REV 0

Form No 3-7.3.6-A3 Rev B

TO CONTACT US - TEL: +44(0)1279-418630 WEB: www.powerserveuk.com EMAIL: info@powerserveuk.com

All information contained in this document is confidential and the copyright reserved

Used on dwg MANUAL

P100917

Quantity D	Quantity C	Quantity B	Quantity A	No	Description	Detail No		OEM Part No
			1	1	SELECTOR GASKET	P100050/1		
			1	2	DIVERTER GASKET	P100050/2		
			1	3	TOP MECHANISM GASKET	P100050/3		
			1	4	BOTTOM MECHANISM GASKET	P100050/4		
			1	5	SIDE MECHANISM GASKET	P100050/5		

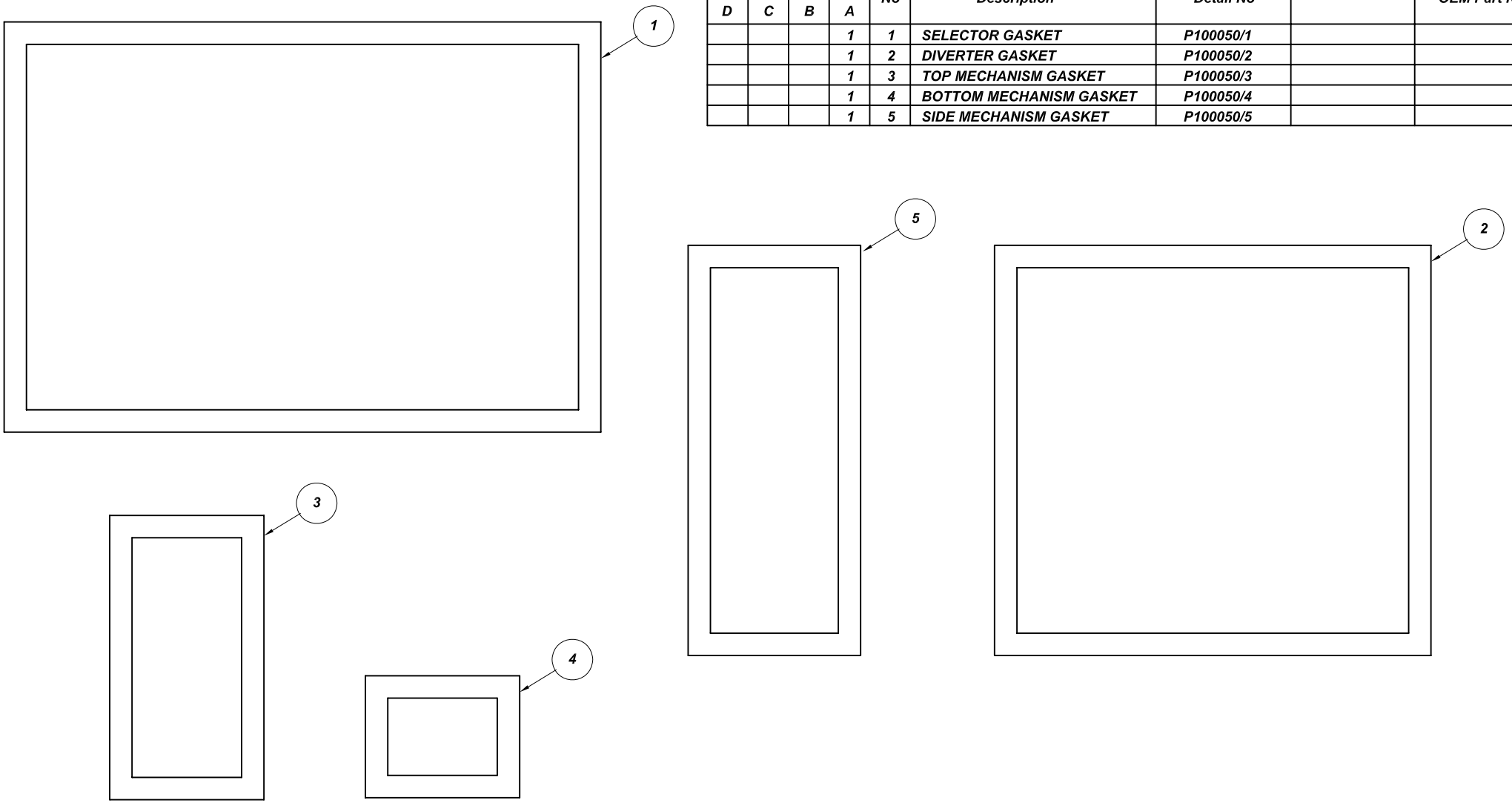

No	Revision notes	Date/Sig	No	Revision notes	Date/Sig	No	Revision notes	Date/Sig

Powerserve UK Limited
SERVING ELECTRICAL UTILITIES

TO CONTACT US
TEL: +44(0)1279-418630
FAX: +44(0)1279-210097
WEB: www.powerserveuk.com
EMAIL: info@powerserveuk.com

Scale NTS | Drawn ACS | Checked AJT | Approved AJT | Date 05/03/10

PATTERN GASKETS FOR AEI TYPE ME501 TAPCHANGER

RE No P100917 REV 0

Sheet No

TO CONTACT US - TEL: +44(0)1279-418630 WEB: www.powerserveuk.com EMAIL: info@powerserveuk.com

All information contained in this document is confidential and the copyright reserved

Used on dwg MANUAL

P117900

Quantity D	Quantity C	Quantity B	Quantity A	No	Description	Detail No	BET Style No	OEM Part No
			12	1	MOVING SPARKER CONTACT	P117001/A	45888P	459704
			24	2	MAIN FIXED CONTACT	P117002/A	45887P	459700
			12	3	SPARKER CONTACT	P117002/B	45886P	459701
			12	4	MAIN MOVING CONTACT	P117004/A	45889P	459703

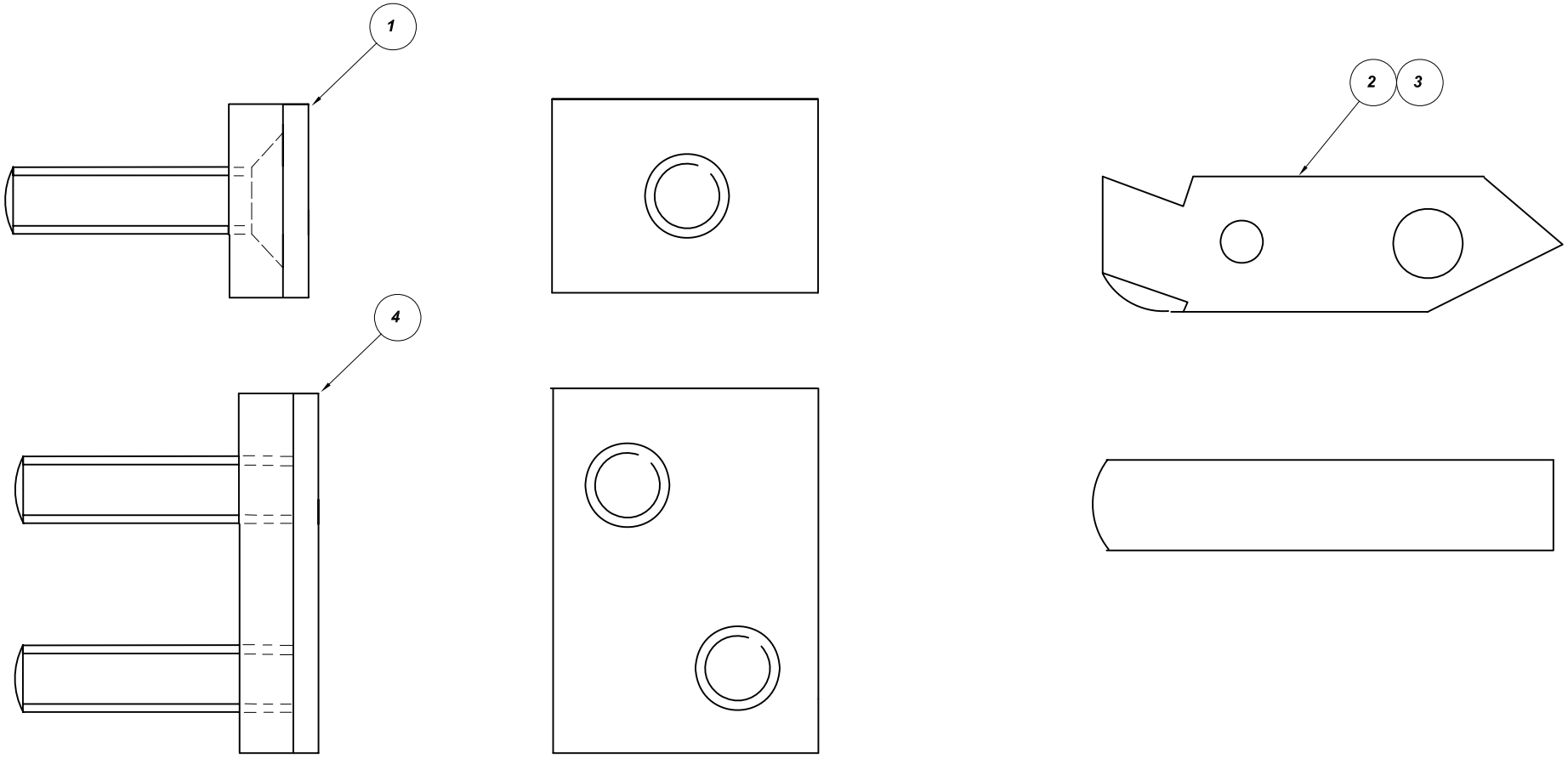

No	Revision notes	Date/Sig	No	Revision notes	Date/Sig	No	Revision notes	Date/Sig

Powerserve UK Limited
SERVING ELECTRICAL UTILITIES

TO CONTACT US
TEL: +44(0)1279-418630
FAX: +44(0)1279-210097
WEB: www.powerserveuk.com
EMAIL: info@powerserveuk.com

PATTERN FIXED AND MOVING CONTACTS - BET/ALLEN WEST TYPE TC033 & LS T/C'S

Scale NTS | Drawn ACS | Checked AJT | Approved AJT | Date 25/02/10

RE No P117900 | REV 0

Sheet No

TO CONTACT US - TEL: +44(0)1279-418630 WEB: www.powerserveuk.com EMAIL: info@powerserveuk.com

All information contained in this document is confidential and the copyright reserved

Used on dwg MANUAL

P117901

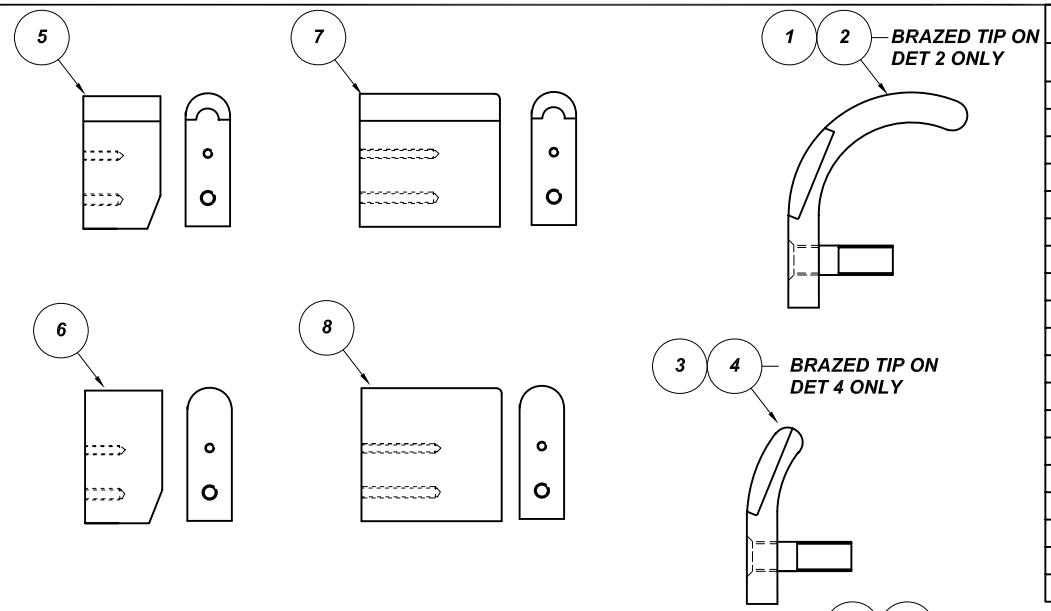

Quantity D	Quantity C	Quantity B	Quantity A	No	Description	Detail No	BET Dwg No	OEM Part No
				1	MOVING ARCING CONTACT	P117003/1	T23/19191Q-7	440419 226843-A
				2	MVNG ARCING CONTACT TIPPED	P117003/A	T23/19191Q-7	440419 226843-B
				3	MOVING ARCING CONTACT	P117003/3	T23/19191Q-8	440419 226843-C
				4	MVNG ARCING CONTACT TIPPED	P117003/B	T23/19191Q-8	440419 226843-D
			2	5	SPARKER BLOCK (TIPPED)	P117006/A		226858-A
		2		6	SPARKER BLOCK	P117006/1		226858-1
	2			7	SPARKER BLOCK (TIPPED)	P117006/B		440419
2				8	SPARKER BLOCK	P117006/3		226858-1
		2	2	9	CONTACT BAR ASSEMBLY	P117008/A	T26/5019Q	226893
2	2			10	CONTACT BAR ASSEMBLY	P117009/A	T26/5019Q	226893
				11	FIXED ARCING HORN	P117005/A	T23/19191Q-9	440419
				12	FIXED ARCING HORN (TIPPED)	P117005/B	T23/19191Q-9	440400 226842-A
				13	PLUNGER ASSEMBLY	P117007/A	T23/19191Q-7	
				14	CONTACT SETTING GAUGE	P117003/1	T26/4258E	226895-A
				15	CONTACT COMPRESSION GAUGE	P117003/1	T26/4258E	226895-B
				16	MAIN CONTACT (UNTIPPED)	P117015/A	T23/7468E	440483 226856-A
				17	MAIN CONTACT (TIPPED)	P117015/C		226856-C
				18	SPARKER CONTACT (UNTIPPED)	P117015/B	T23/7468E	440363 226856-B
				19	SPARKER CONTACT (TIPPED)	P117015/D		226856-D

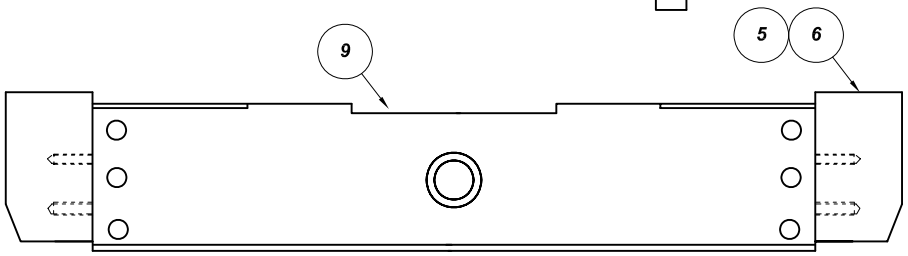

GROUP A AND GROUP B (TIPPED BLOCKS)

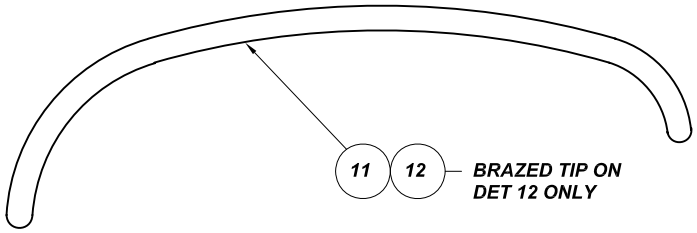

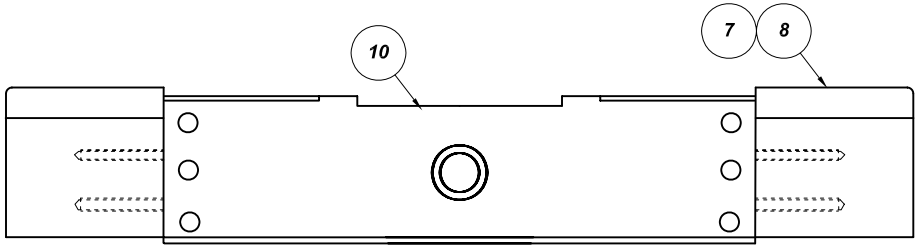

GROUP C AND GROUP D (TIPPED BLOCKS)

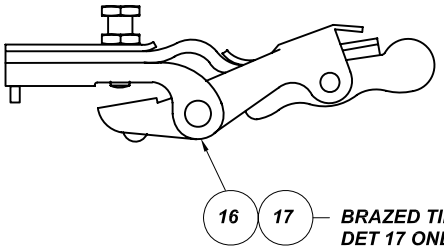

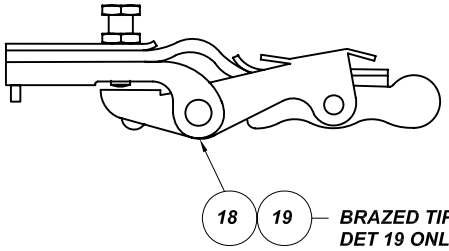

No	Revision notes	Date/Sig	No	Revision notes	Date/Sig	No	Revision notes	Date/Sig

Powerserve UK Limited
SERVING ELECTRICAL UTILITIES

TO CONTACT US
TEL: +44(0)1279-418630
FAX: +44(0)1279-210097
WEB: www.powerserveuk.com
EMAIL: info@powerserveuk.com

PATTERN CONTACTS & SETTING GAUGES FOR ALLEN WEST/BET T/C'S

Scale NTS | Drawn ACS | Checked AJT | Approved AJT | Date 25/12/91

RE No | Sheet No | P117901 | REV 0

TO CONTACT US - TEL: +44(0)1279-418630 WEB: www.powerserveuk.com EMAIL: info@powerserveuk.com

All information contained in this document is confidential and the copyright reserved

Used on dwg MANUAL

P117902

Quantity D	Quantity C	Quantity B	Quantity A	No	Description	Detail No		OEM Part No
			1	1	GASKET SEAL	P117018/2		
			1	2	GASKET SEAL	P117018/1		
			1	3	SEAL	25 x 35 x 7		
			2	4	TAPER PIN - SLOTTED	P340924/3		
			1	5	WASHER	P117017/3		
			1	6	GASKET	P117017/2		
			1	7	GASKET	P117017/1		

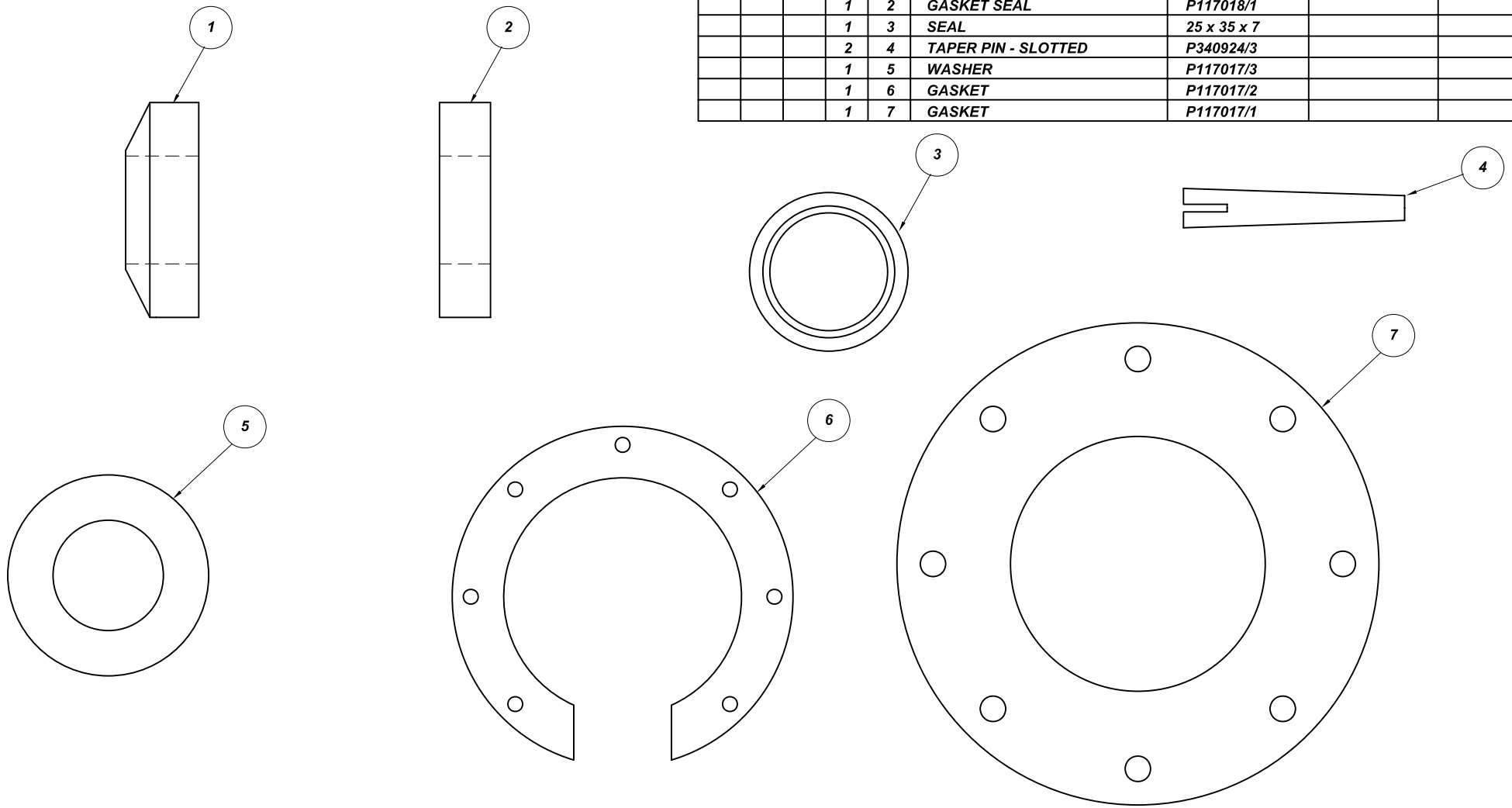

No	Revision notes	Date/Sig	No	Revision notes	Date/Sig	No	Revision notes	Date/Sig

Powerserve UK Limited
SERVING ELECTRICAL UTILITIES

TO CONTACT US
TEL: +44(0)1279-418630
FAX: +44(0)1279-210097
WEB: www.powerserveuk.com
EMAIL: info@powerserveuk.com

GASKET AND SEALING KIT FOR AN OIL TIGHT GLAND FOR AN ALLEN WEST/BET LS T/C

Scale NTS | Drawn ACS | Checked AJT | Approved AJT | Date 25/02/10

RE No P117902 REV 0

Sheet No

TO CONTACT US - TEL: +44(0)1279-418630 WEB: www.powerserveuk.com EMAIL: info@powerserveuk.com

All information contained in this document is confidential and the copyright reserved

Used on dwg MANUAL

P117903

Quantity D	Quantity C	Quantity B	Quantity A	No	Description	Detail No		OEM Part No
				1	CONTACT HEAD ASSEMBLY	P117019/B		
				2	RING CONTACT	P117019/3		

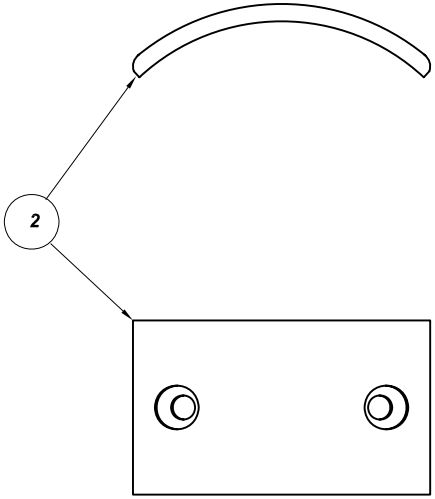

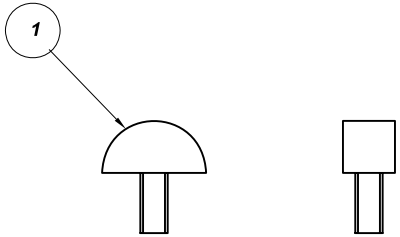

NUT AND WASHER NOT SHOWN

No	Revision notes	Date/Sig	No	Revision notes	Date/Sig	No	Revision notes	Date/Sig

Powerserve UK Limited
SERVING ELECTRICAL UTILITIES

TO CONTACT US
TEL: +44(0)1279-418630
FAX: +44(0)1279-210097
WEB: www.powerserveuk.com
EMAIL: info@powerserveuk.com

MAINTAINING SWITCH TYPE PATTERN CONTACTS FOR A AN ALLEN WEST/BET LS T/C

Scale NTS | Drawn ACS | Checked AJT | Approved AJT | Date 05/03/10

RE No | Sheet No | P117903 | REV 0

TO CONTACT US - TEL: +44(0)1279-418630 WEB: www.powerserveuk.com EMAIL: info@powerserveuk.com

All information contained in this document is confidential and the copyright reserved

Used on dwg MANUAL

P140900

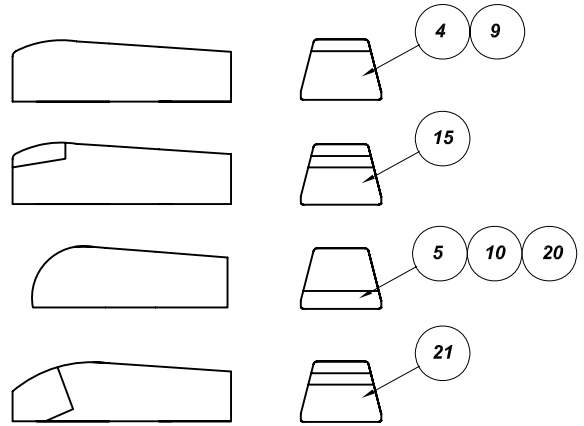

Quantity G	Quantity F	Quantity E	Quantity D	Quantity C	Quantity B	Quantity A	No	Description	Detail No	Min Code	OEM Part No
				6	6	6	1	FIXED CONTACT ASSEMBLY(NEW)	P140017/B	872-2501	E5681357/04
						6	2	MOVING CONTACT ASSY (STEEL TIP)	P140018/A	872-2500	C5680961/01
					6		3	MOVING CONTACT ASSY (W/Cu TIP)	P140018/B		
							4	ARCING FINGER(METRIC)	P140022/2	872-2503	5681357/03
							5	CONTACT FINGER(METRIC)	P140022/1	872-2510	
							6	CHECKING GAUGE	P140850/1		T130100
							7	CENTER RING	P140025/3		
							8	FIXED CONTACT ASSEMBLY(OLD)	P140017/A		
							9	ARCING FINGER(IMPERIAL)	P140022/4		
							10	CONTACT FINGER(IMPERIAL)	P140022/3		
							11	CROSS JET POT (NOT SHOWN)	P140064/A	872-2511	B5271324/00
							12	RUBBER TANK SEAL (Not shown)	P140041/1	872-2570	5261549/00
		6					13	FIXED CONTACT ASSEMBLY	P140067/A		E5681363/00
		6	6				14	MOVING CONTACT ASSY (W/Cu TIP)	P140057/B		E5681200/00
							15	ARCING FINGER(TIPPED)	P140058/A		
				6			16	MOVING CONTACT ASSY (STEEL TIP)	P140057/A	872-2700	C5680961/02
			6				17	FIXED CONTACT ASSEMBLY	P140056/B		E5681358/00
							18	CHECKING GAUGE	P140852/1		T130100/1
							19	CHECKING GAUGE	P140853/1		T130102
							20	SPECIAL CONTACT FINGER	P140075/1		
							21	SPECIAL ARCING FINGER(TIPPED)	P140075/A		
							22	COVER GASKET (Not Shown)	P140042/1		

NOTE - GROUP A - FIXED & MOVING KIT FOR TYPES R4/1, R12/1, Q16/1 & Q20/1
GROUP B - AS GROUP A BUT LIFE EXTENSION
GROUP C - FIXED & MOVING KIT FOR TYPE R8/1
GROUP D - FIXED & MOVING KIT FOR TYPES R4/2, R8/2, R12/2, R12/3, Q16/2, Q16/3, Q20/2 & Q20/3
GROUP E - FIXED AND MOVING KIT FOR TYPE R8/3

SEE DRAWING P140918 FOR MORE VB PARTS

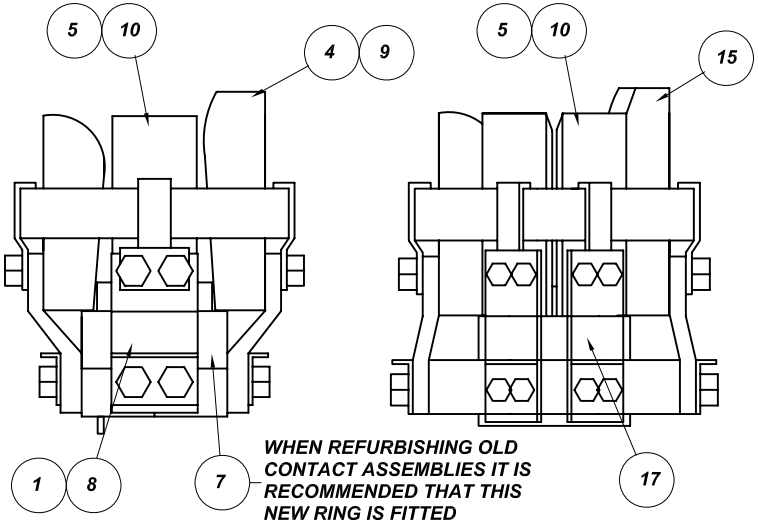

WHEN REFURBISHING OLD CONTACT ASSEMBLIES IT IS RECOMMENDED THAT THIS NEW RING IS FITTED

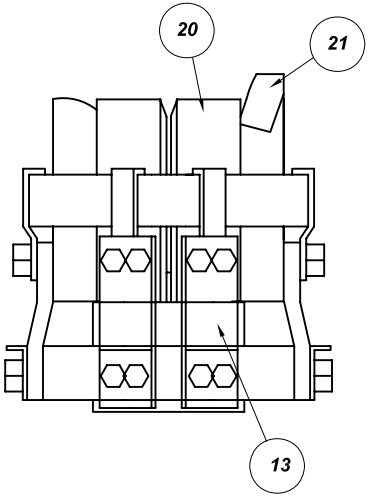

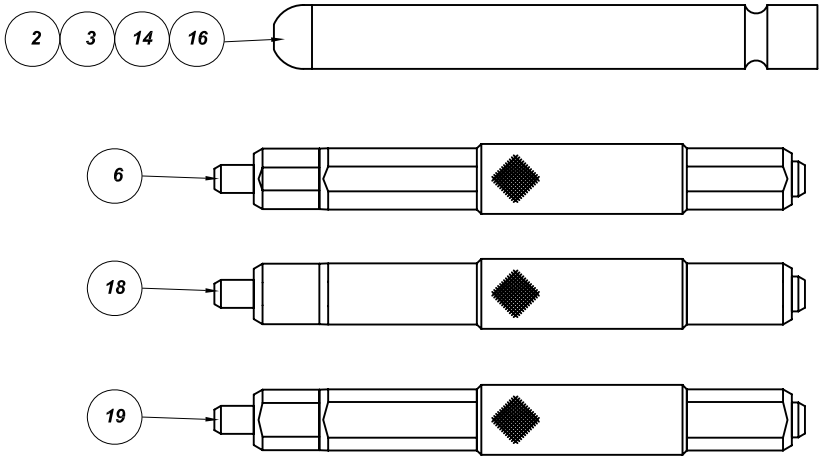

No	Revision notes	Date/Sig	No	Revision notes	Date/Sig	No	Revision notes	Date/Sig

Powerserve UK Limited
SERVING ELECTRICAL UTILITIES

TO CONTACT US
TEL: +44(0)1279-418630
FAX: +44(0)1279-210097
WEB: www.powerserveuk.com
EMAIL: info@powerserveuk.com

PATTERN FIXED & MOVING CONTACTS FOR BRUSH TYPE VSI/VTD/VB SWITCHGEAR

Scale NTS | Drawn ACS | Checked AJT | Approved AJT | Date 26/02/10

RE No P140900 | REV 0

Sheet No

TO CONTACT US - TEL: +44(0)1279-418630 WEB: www.powerserveuk.com EMAIL: info@powerserveuk.com

All information contained in this document is confidential and the copyright reserved

Used on dwg MANUAL

P140917

PART#	ATL PART#	BRUSH #	NAT COM CODE				
P140001/A	317543-A	6800087	35-37-090	A= 25.4	B=12.7	C=6.5	D=8
P140001/B	317543-B	6800349	35-37-091	A=38	B=12.7	C=6.5	D=8
P140001/C	317543-C	6801465	35-37-092	A=38	B=19	C=8.5	D=6.35

Quantity D	Quantity C	Quantity B	Quantity A	No	Description	Detail No		OEM Part No
				1	CONTACT ASSEMBLY	P140001/A		
				2	CONTACT ASSEMBLY	P140001/B		
				3	CONTACT ASSEMBLY	P140001/C		
				4	BRAID	P140015/A		
				5	BRAID (2 LAYER)	P140021/A		
				6	BRAID (4 LAYER)	P140021/B		
				7	LINEAR RESISTOR BLOCK	P140016 Various	NOT DRAWN	
				8	BRAID	P140036/A		
				9	SPRING	P140038/1		
				10	BUFFER	P140037/A		
				11	BRAID (2 LAYER)	P140021/C		
				12	BRAID (4 LAYER)	P140021/D		
				13	BRAID	P140043/A		
				14	SELECTOR MOVING CONTACT	P140044/1		
				15	C/O MOVING CONTACT	P140044/2		
				16	MOVING CONTACT SPRING	P140046/1		

SEE DRAWING P140920 FOR OTHER HSR PARTS

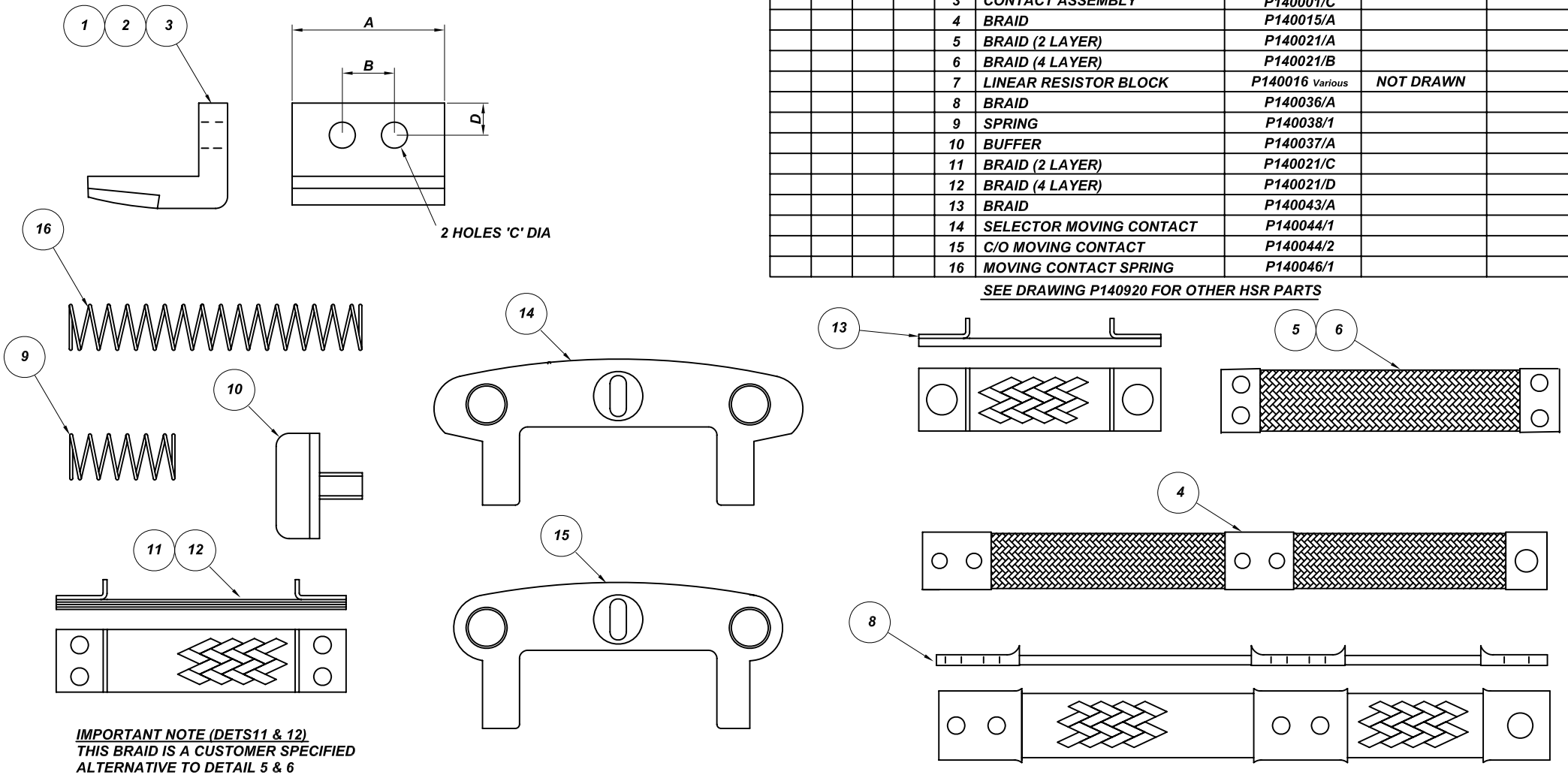

IMPORTANT NOTE (DETS11 & 12)
THIS BRAID IS A CUSTOMER SPECIFIED ALTERNATIVE TO DETAIL 5 & 6

No	Revision notes	Date/Sig	No	Revision notes	Date/Sig	No	Revision notes	Date/Sig

Powerserve UK Limited
SERVING ELECTRICAL UTILITIES

TO CONTACT US
TEL: +44(0)1279-418630
FAX: +44(0)1279-210097
WEB: www.powerserveuk.com
EMAIL: info@powerserveuk.com

Scale NTS | Drawn ACS | Checked AJT | Approved AJT | Date 25/02/10

PATTERN FLEXES, LINEAR RES'R BLOCKS, FIXED & MOVING DIV CONTACTS FOR BRUSH HSR T/C

RE No P140917 REV 0

Sheet No

Form No 3-7.3.6-A3 Rev B

TO CONTACT US - TEL: +44(0)1279-418630 WEB: www.powerserveuk.com EMAIL: info@powerserveuk.com

All information contained in this document is confidential and the copyright reserved

Used on dwg MANUAL

P140918

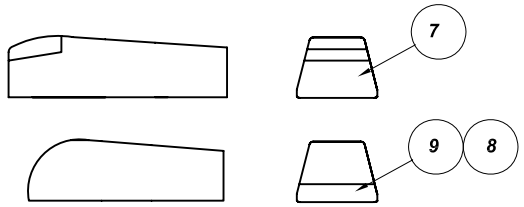

Quantity D	Quantity C	Quantity B	Quantity A	No	Description	Detail No	Min Code	OEM Part No
			6	1	FIXED CONTACT ASSEMBLY	P140056/A		E5681358/01
	6	6		2	FIXED CONTACT ASSEMBLY	P140056/B		E5681358/00
			6	3	MOVING CONTACT	P140066/1		E5660259/00
		6		4	MOVING CONTACT ASSY (W/Cu TIP)	P140065/A		E5680291/00
	6			5	MOVING CONTACT ASSY (W/Cu TIP)	P140057/B		E5681200/00
				6	CHECKING GAUGE	P140852/1		T130100/1
				7	ARCING FINGER(TIPPED)	P140058/A		
				8	CONTACT FINGER(METRIC)	P140022/1	872-2510	
				9	CONTACT FINGER(IMPERIAL)	P140022/3		

SEE DRAWING P140900 FOR MORE VB PARTS

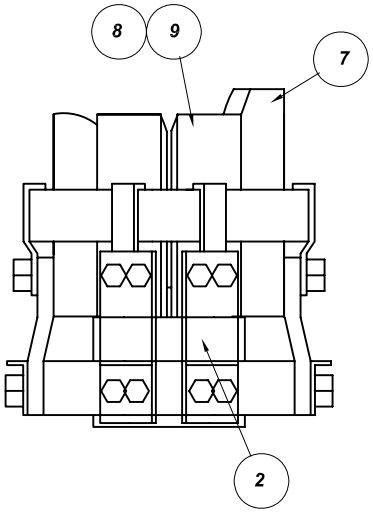

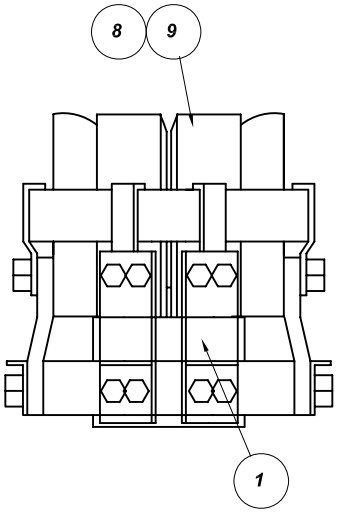

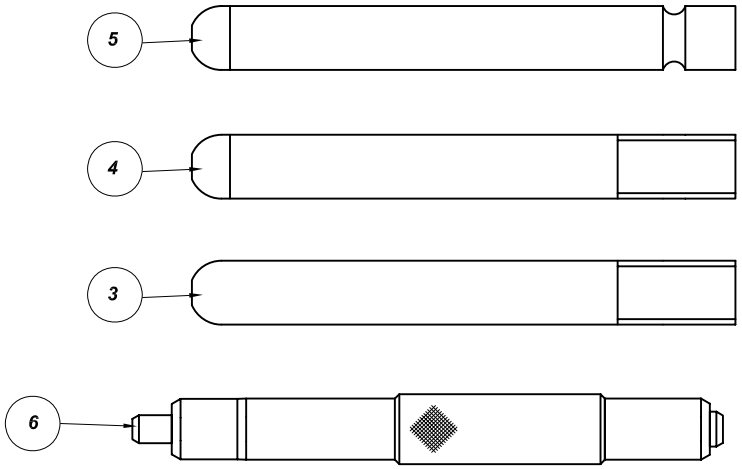

NOTE - GROUP A - FIXED & MOVING KIT FOR TYPES Q4/11/1 & Q8/11/1
GROUP B - FIXED & MOVING KIT FOR TYPES Q4/6.6/1, Q4/11/2, Q4/6.6/2, Q4/11/3, Q4/150/3.3, Q8/6.6/1, Q8/11/2, Q8/6.6/2, Q8/11/3 & Q8/150/3.3
GROUP C - FIXED & MOVING KIY FOR TYPES Q4/11/4, Q8/11/4, Q4MK2/6.6/1, Q4MK2/11/1, Q4MK2/11/2 Q4MK2/6.6/2, Q4MK2/11/3, Q4MK2/3.3/1, Q8MK2/6.6/1, Q8MK2/11/1, Q8MK2/11/2, Q8MK2/6.6/2, Q8MK2/11/3, Q8MK2/3.3/1 & Q8MK2/6.6/3

No	Revision notes	Date/Sig	No	Revision notes	Date/Sig	No	Revision notes	Date/Sig

Powerserve UK Limited
SERVING ELECTRICAL UTILITIES

TO CONTACT US
TEL: +44(0)1279-418630
FAX: +44(0)1279-210097
WEB: www.powerserveuk.com
EMAIL: info@powerserveuk.com

Scale NTS | Drawn ACS | Checked AJT | Approved AJT | Date 26/02/10

PATTERN FIXED & MOVING CONTACTS FOR BRUSH TYPE VB SWITCHGEAR

RE No P140918 REV 0

Sheet No

TO CONTACT US - TEL: +44(0)1279-418630 WEB: www.powerserveuk.com EMAIL: info@powerserveuk.com

All information contained in this document is confidential and the copyright reserved

Used on dwg MANUAL

P140920

Quantity D	Quantity C	Quantity B	Quantity A	No	Description	Detail No		OEM Part No
				1	SELECTOR MOVING CONTACT	P140052/1		
				2	C/O MOVING CONTACT	P140052/2		
				3	FIXED CONTACT STEM	P140045/A		
				4	FIXED STEM	P140055/A		
				5	FIXED STEM	P140054/A		
				6	GLASS TUBE (METROSIL ASSY)	P140049		
				7	TOP COVER GASKET	P140050/2		
				8	FRONT COVER GASKET	P140050/1		
				9	REPLACEMENT BRAID	P140051/A		

SEE DRAWING P140917 FOR OTHER HSR PARTS

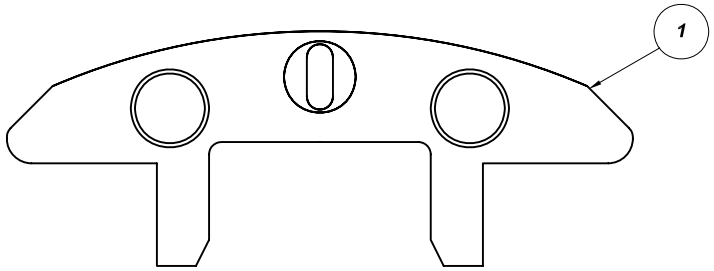

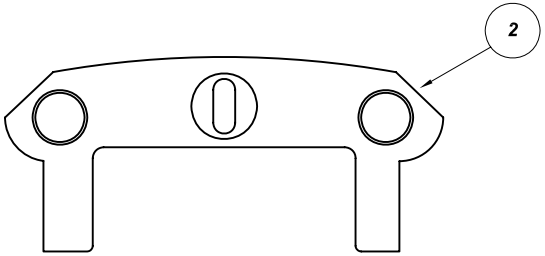

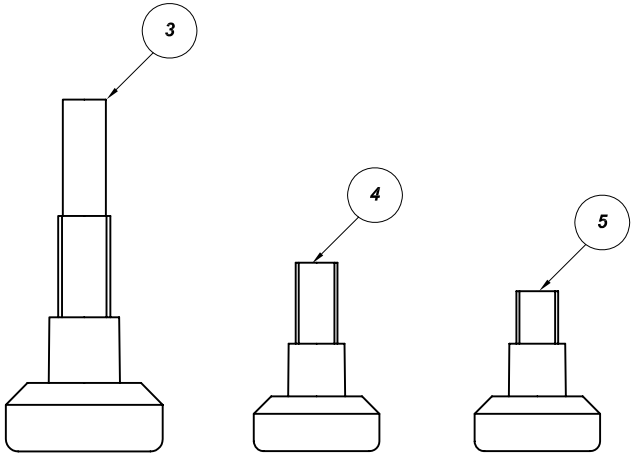

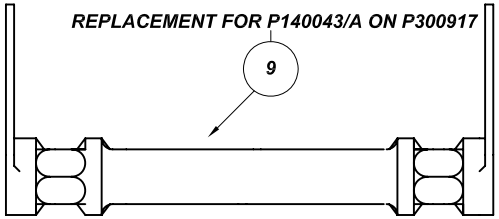

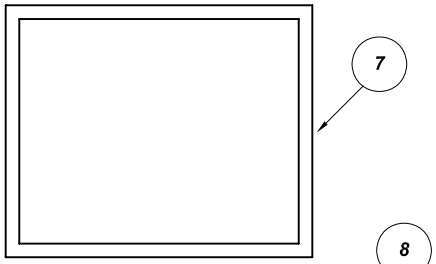

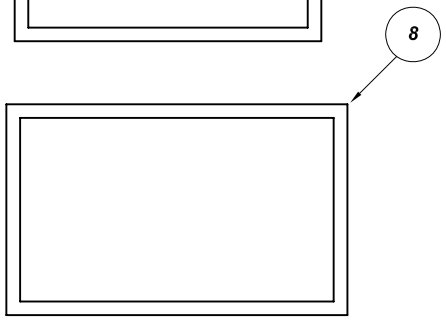

REPLACEMENT GASKETS ARE UNDRILLED BECAUSE OF STUD VARIATIONS ON TANKS

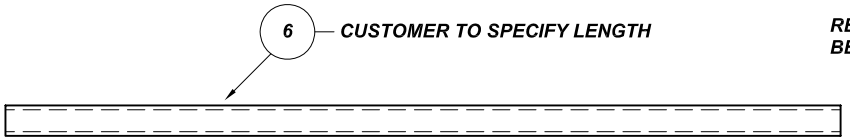

No	Revision notes	Date/Sig	No	Revision notes	Date/Sig	No	Revision notes	Date/Sig

Powerserve UK Limited
SERVING ELECTRICAL UTILITIES

TO CONTACT US
TEL: +44(0)1279-418630
FAX: +44(0)1279-210097
WEB: www.powerserveuk.com
EMAIL: info@powerserveuk.com

PATTERN FIXED & MOVING CONTACTS, GASKETS, GLASS TUBES & BRAID FOR HSR T/C

Scale NTS | Drawn ACS | Checked AJT | Approved AJT | Date 26/02/10

RE No | Sheet No | P140920 | REV 0

TO CONTACT US - TEL: +44(0)1279-418630 WEB: www.powerserveuk.com EMAIL: info@powerserveuk.com

All information contained in this document is confidential and the copyright reserved

Used on dwg MANUAL

P160901

Quantity D	Quantity C	Quantity B	Quantity A	No	Description	Detail No		OEM Part No
				1	FIXED CONTACT	P160001/1		

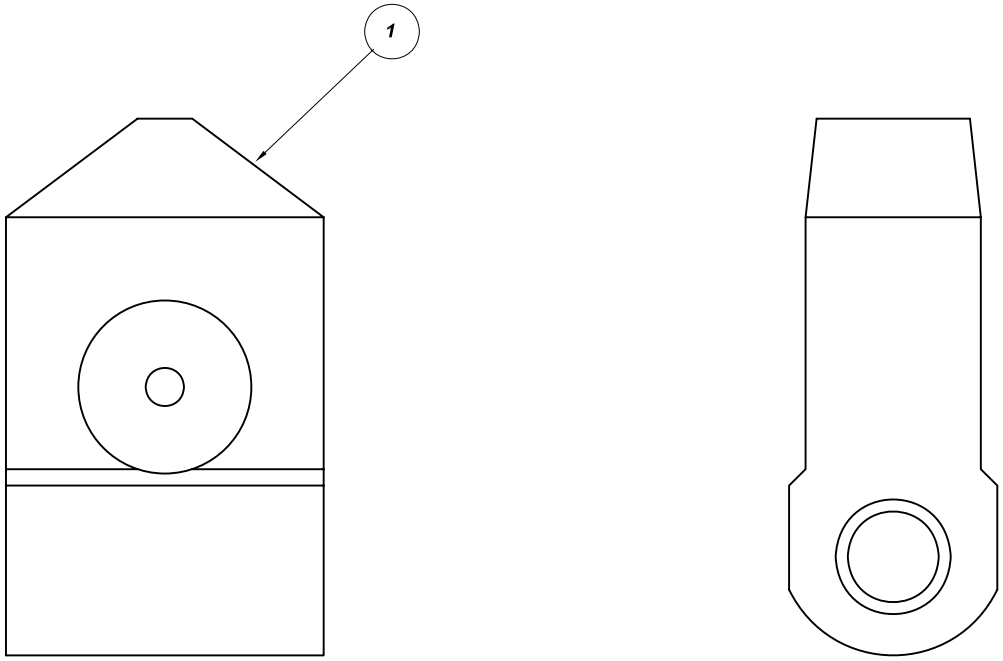

No	Revision notes	Date/Sig	No	Revision notes	Date/Sig	No	Revision notes	Date/Sig

Powerserve UK Limited
SERVING ELECTRICAL UTILITIES

Scale NTS Drawn ACS Checked AJT Approved AJT Date 26/02/10

TO CONTACT US
TEL: +44(0)1279-418630
FAX: +44(0)1279-210097
WEB: www.powerserveuk.com
EMAIL: info@powerserveuk.com

PATTERN FIXED CONTACT FOR THOMSON HOUSTON TYPE MF54

RE No P160901 REV 0

Sheet No

TO CONTACT US - TEL: +44(0)1279-418630 WEB: www.powerserveuk.com EMAIL: info@powerserveuk.com

All information contained in this document is confidential and the copyright reserved

Used on dwg MANUAL

P160902

Quantity D	Quantity C	Quantity B	Quantity A	No	Description	Detail No		OEM Part No
				1	CONTACT (2 HOLE TIPPED)	P160002/A		
				2	CONTACT (1 HOLE TIPPED)	P160003/A		
				3	CONTACT (2 HOLE PLAIN)	P160004/1		
				4	CONTACT (1 HOLE PLAIN)	P160004/2		

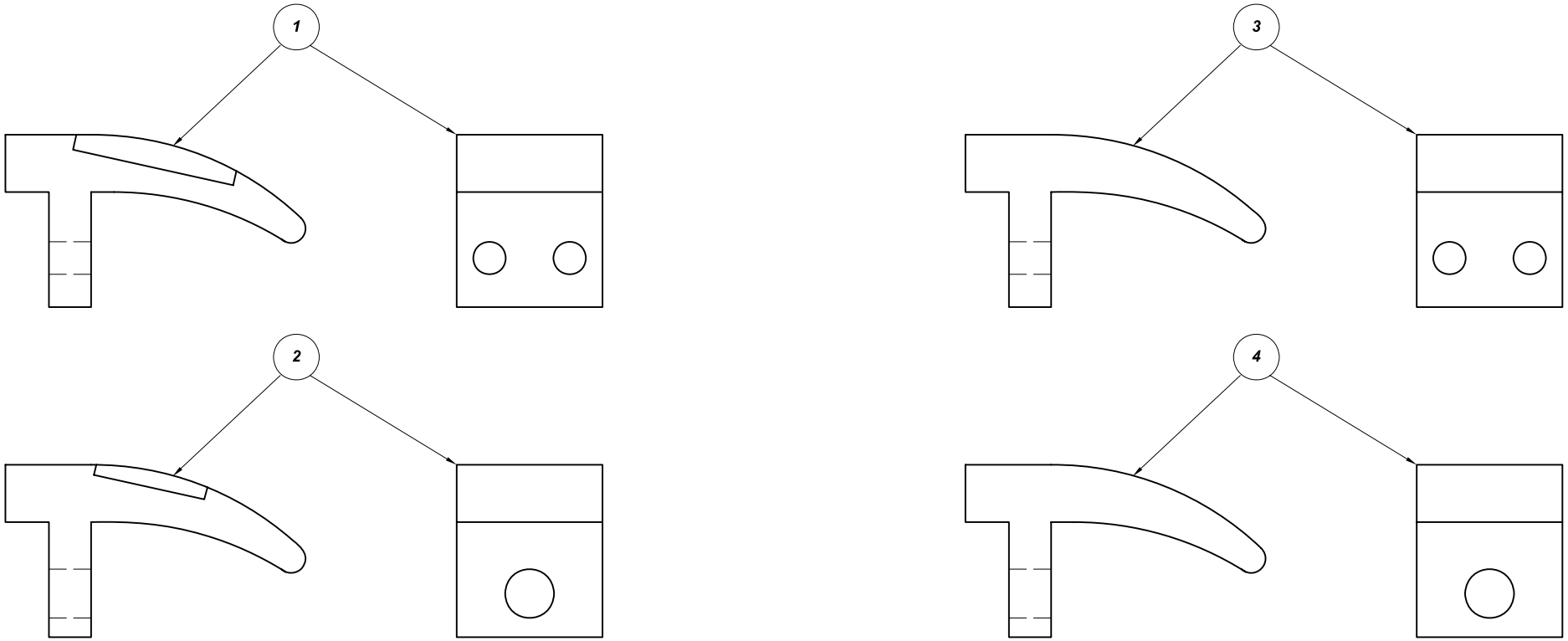

No	Revision notes	Date/Sig	No	Revision notes	Date/Sig	No	Revision notes	Date/Sig

Powerserve UK Limited
SERVING ELECTRICAL UTILITIES

TO CONTACT US
TEL: +44(0)1279-418630
FAX: +44(0)1279-210097
WEB: www.powerserveuk.com
EMAIL: info@powerserveuk.com

PATTERN CONTACTS FOR BRITISH THOMSON HOUSTON TYPE ATC T/C'S

Scale NTS | Drawn ACS | Checked AJT | Approved AJT | Date 25/02/10

RE No | Sheet No | P160902 | REV 0

Form No 3-7.3.6-A3 Rev B

TO CONTACT US - TEL: +44(0)1279-418630 WEB: www.powerserveuk.com EMAIL: info@powerserveuk.com

All information contained in this document is confidential and the copyright reserved

Used on dwg MANUAL

P179904

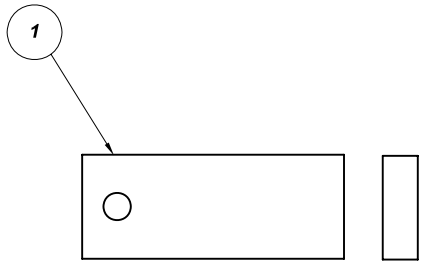

Quantity D	Quantity C	Quantity B	Quantity A	No	Description	Detail No		OEM Part No
		1	1	1	ARCING CONTACT	P179007/1		
			4	2	FIXED CONTACT FINGER (STD)	P179009/A		
			1	3	MOVING CONTACT FINGER (STD)	P179007/2		
		4		4	FIXED CONTACT FINGER (EXT)	P179009/B		
		1		5	MOVING CONTACT FINGER (EXT)	P179007/B		
				6	FIXED CONT FINGER (NO FLEX)	P179008/1		
				7	FIXED CONT FLEX (NO FINGER)	P179009/4		
				8	EXT LIFE FINGER (NO FLEX)	P179008/A		

GROUP A - PATTERN FIXED & MOVING CONTACT KIT
GROUP B - EXTENDED LIFE FIXED & MOVING CONTACT KIT

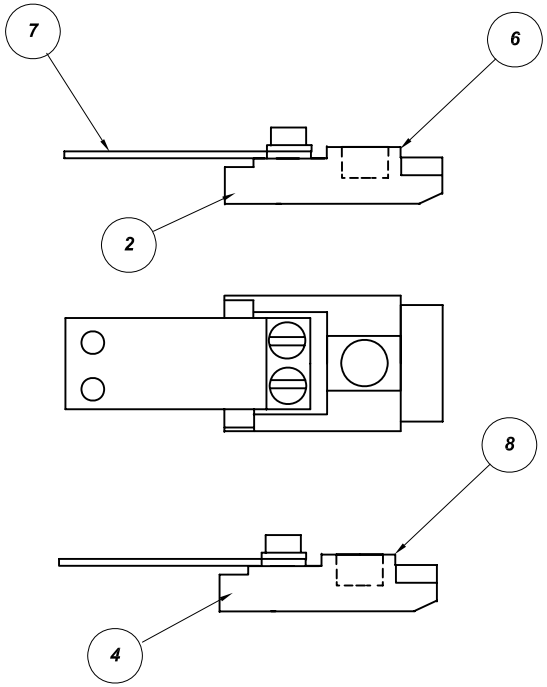

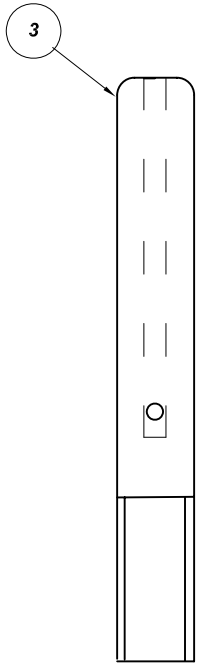

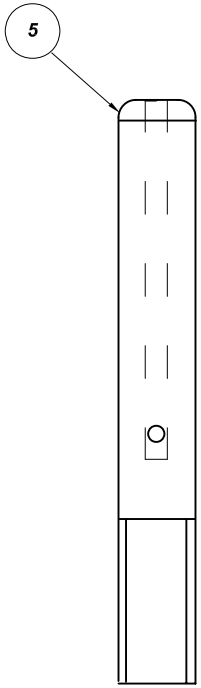

No	Revision notes	Date/Sig	No	Revision notes	Date/Sig	No	Revision notes	Date/Sig

Powerserve UK Limited
SERVING ELECTRICAL UTILITIES

TO CONTACT US
TEL: +44(0)1279-418630
FAX: +44(0)1279-210097
WEB: www.powerserveuk.com
EMAIL: info@powerserveuk.com

PATTERN FIXED & MOVING CONTACTS FOR CROMPTON PARKINSON TYPE ALA & ALB

Scale NTS | Drawn ACS | Checked AJT | Approved AJT | Date 26/02/10

RE No | Sheet No | P179904 | REV 0

TO CONTACT US - TEL: +44(0)1279-418630 WEB: www.powerserveuk.com EMAIL: info@powerserveuk.com

All information contained in this document is confidential and the copyright reserved

Used on dwg MANUAL

P179905

Quantity D	Quantity C	Quantity B	Quantity A	No	Description	Detail No		OEM Part No
				1	FIXED CONTACT ASSEMBLY	P179017/A		
				2	MOVING CONTACT	P179010/1		

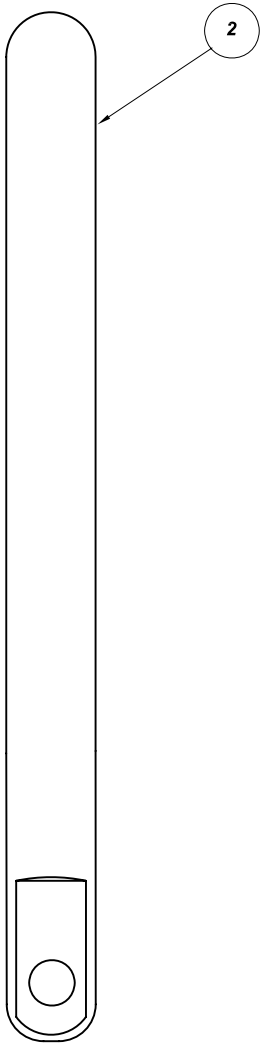

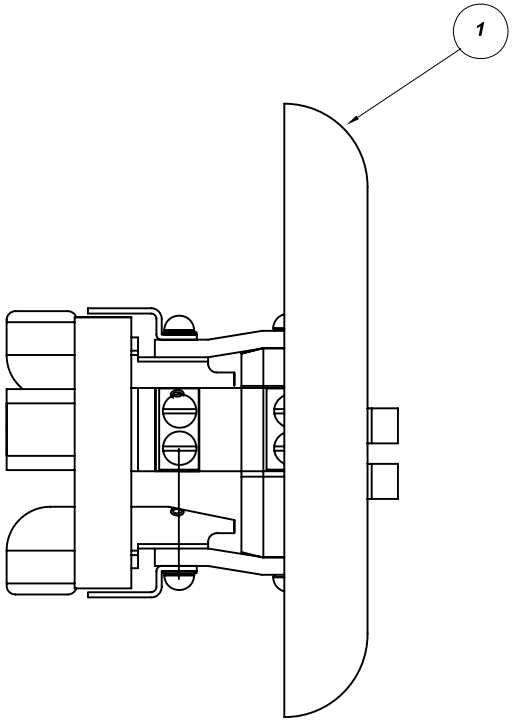

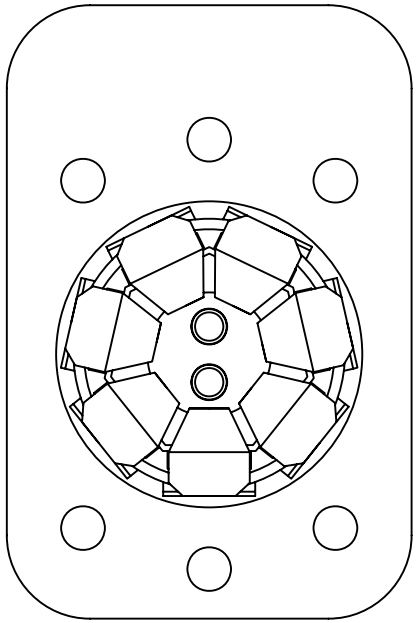

NOTE - NOT ALL FINGERS SHOWN FOR CLARITY

No	Revision notes	Date/Sig	No	Revision notes	Date/Sig	No	Revision notes	Date/Sig

Powerserve UK Limited
SERVING ELECTRICAL UTILITIES

TO CONTACT US
TEL: +44(0)1279-418630
FAX: +44(0)1279-210097
WEB: www.powerserveuk.com
EMAIL: info@powerserveuk.com

PATTERN FIXED & MOVING CONTACTS FOR CROMPTON PARKINSON OE5 SWITCHGEAR

Scale NTS | Drawn ACS | Checked AJT | Approved AJT | Date 26/02/10

RE No | Sheet No | P179905 | REV 0

TO CONTACT US - TEL: +44(0)1279-418630 WEB: www.powerserveuk.com EMAIL: info@powerserveuk.com

All information contained in this document is confidential and the copyright reserved

Used on dwg

P179906

Quantity D	Quantity C	Quantity B	Quantity A	No	Description	Detail No		OEM Part No
				1	MOVING CONTACT	P179022/A		
				2	CONTACTOR CONTACT	P179044/A		
				3	SPRING	P179045/1		
				4	PRESSPAHN WASHER	P179046/1		

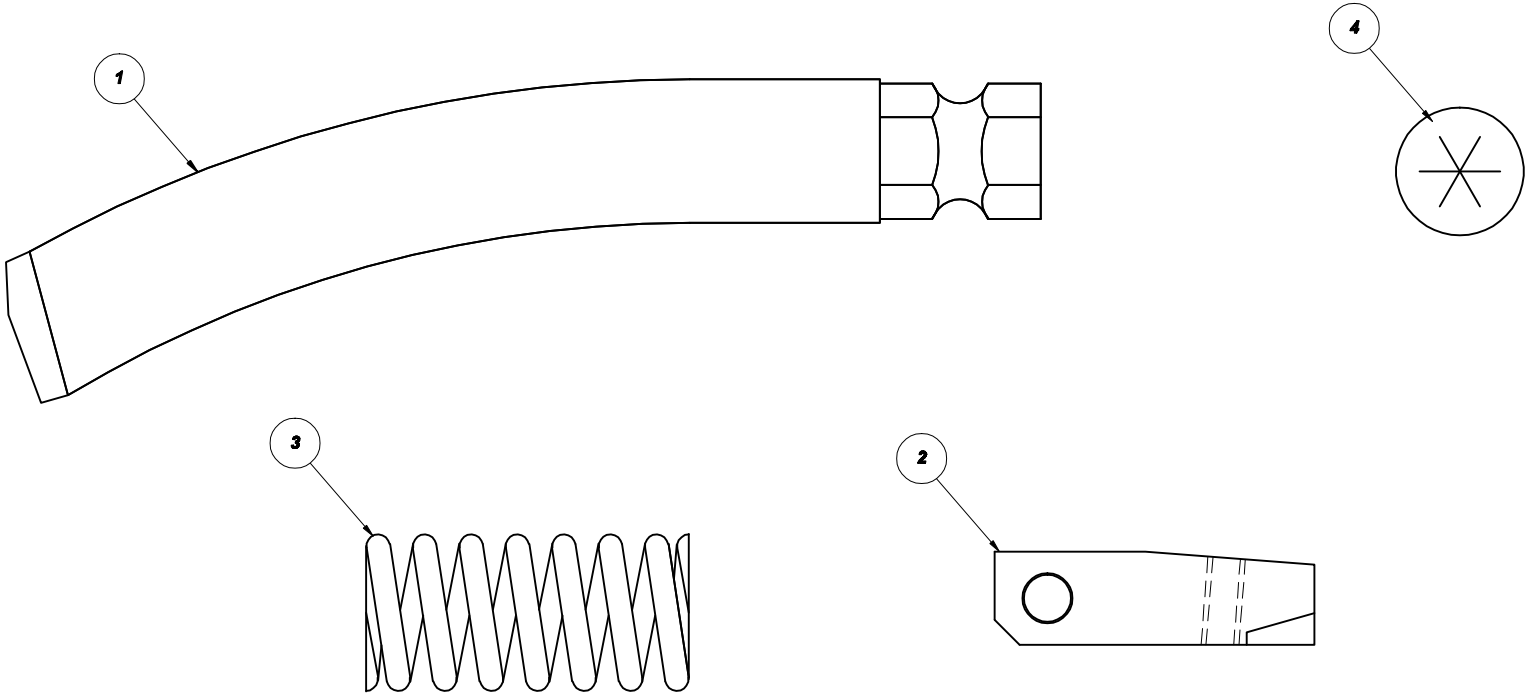

No	Revision notes	Date/Sig	No	Revision notes	Date/Sig	No	Revision notes	Date/Sig

Powerserve UK Limited
SERVING ELECTRICAL UTILITIES

TO CONTACT US
TEL: +44(0)1279-418630
FAX: +44(0)1279-210097
WEB: www.powerserveuk.com
EMAIL: info@powerserveuk.com

REPLACEMENT CONTACTS SPRING AND WASHER FOR S'GEAR & COWAN TYPE K GEAR

Scale NTS | Drawn AJT | Checked | Approved AJT | Date 19/04/13

RE No P179906 | REV 0 | Sheet No

TO CONTACT US - TEL: +44(0)1279-418630 WEB: www.powerserveuk.com EMAIL: info@powerserveuk.com

All information contained in this document is confidential and the copyright reserved

Used on dwg MANUAL

P185901

Quantity D	Quantity C	Quantity B	Quantity A	No	Description	Detail No		OEM Part No
				1	MOVING CONTACT	P185001/1		
				2	NARROW CONTACT FINGER	P185001/2		
				3	WIDE CONTACT FINGER	P185001/3		

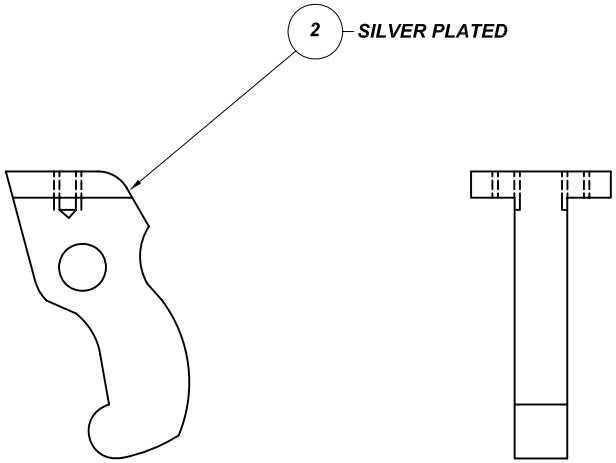

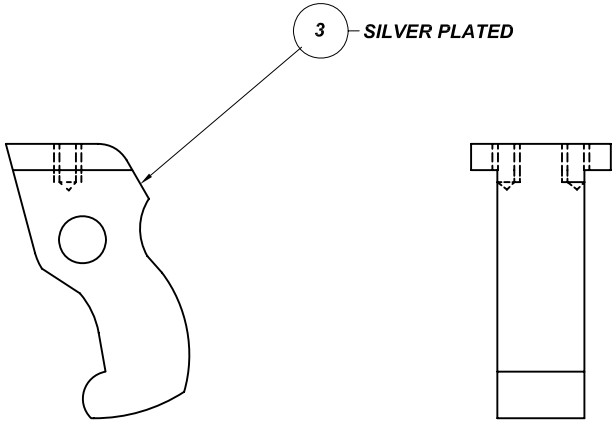

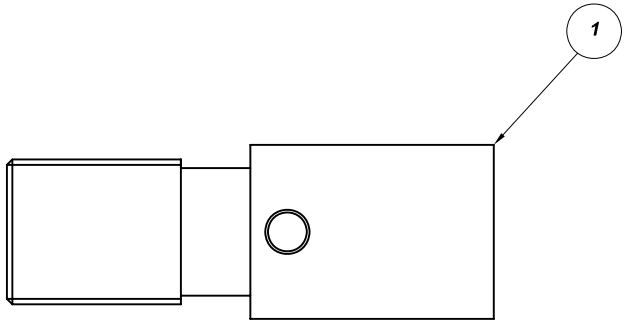

No	Revision notes	Date/Sig	No	Revision notes	Date/Sig	No	Revision notes	Date/Sig

Powerserve UK Limited
SERVING ELECTRICAL UTILITIES

TO CONTACT US
TEL: +44(0)1279-418630
FAX: +44(0)1279-210097
WEB: www.powerserveuk.com
EMAIL: info@powerserveuk.com

PATTERN MOVING AND FIXED NARROW & WIDE FINGERS FOR COOKE & FERGUSON OF5 SWGR

Scale NTS | Drawn ACS | Checked AJT | Approved AJT | Date 01/03/10

RE No | Sheet No | P185901 | REV 0

Form No 3-7.3.6-A3 Rev B

TO CONTACT US - TEL: +44(0)1279-418630 WEB: www.powerserveuk.com EMAIL: info@powerserveuk.com

All information contained in this document is confidential and the copyright reserved

Used on dwg MANUAL

P194900

Quantity D	Quantity C	Quantity B	Quantity A	No	Description	Detail No		OEM Part No
				1	CONTACT FINGER	P190001/A		23-3514
				2	CONTACT FINGER	P190002/A		23-4026
				3	CONTACT FINGER	P190003/A		23-3286
				4	CONTACT FINGER	P190004/A		23-435
				5	CONTACT FINGER	P190005/A		23-717

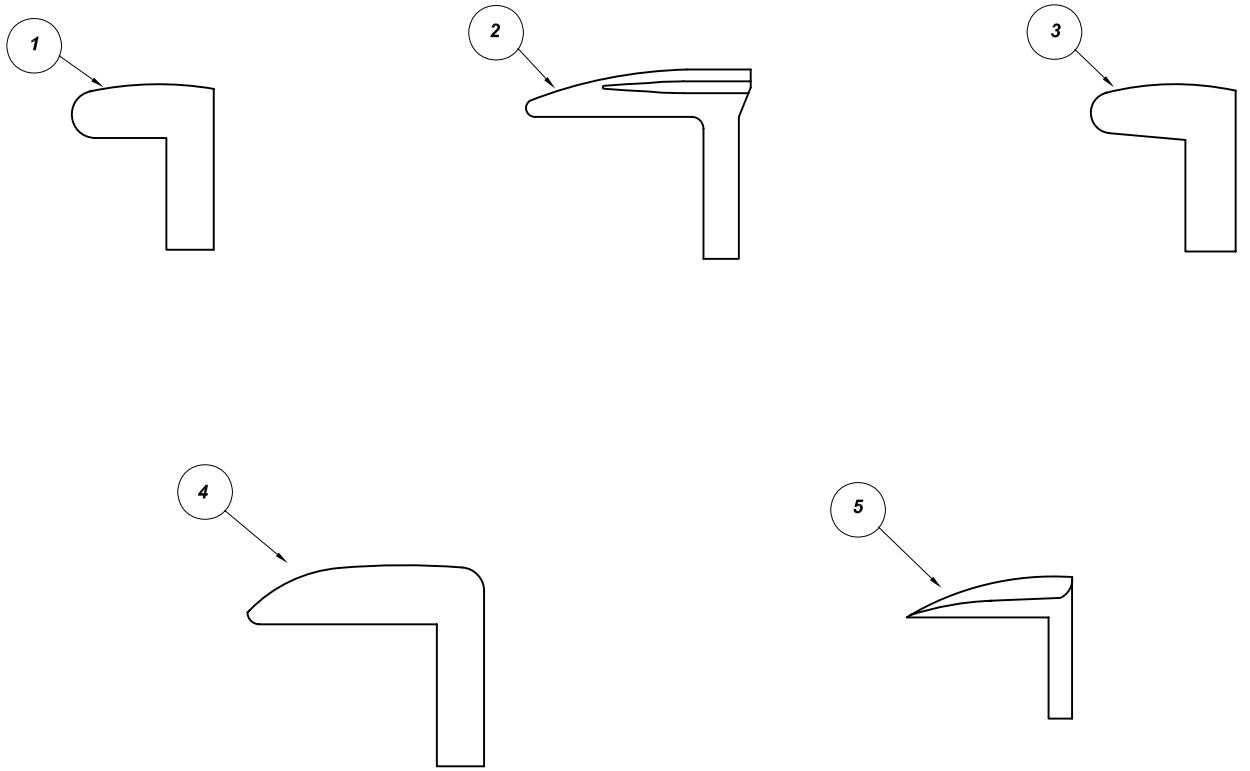

No	Revision notes	Date/Sig	No	Revision notes	Date/Sig	No	Revision notes	Date/Sig

Powerserve UK Limited
SERVING ELECTRICAL UTILITIES

TO CONTACT US
TEL: +44(0)1279-418630
FAX: +44(0)1279-210097
WEB: www.powerserveuk.com
EMAIL: info@powerserveuk.com

Scale NTS | Drawn ACS | Checked AJT | Approved AJT | Date 05/03/10

PATTERN CONTACTS FOR CUTLER HAMMER

RE No P194900 REV 0

Sheet No

TO CONTACT US - TEL: +44(0)1279-418630 WEB: www.powerserveuk.com EMAIL: info@powerserveuk.com

All information contained in this document is confidential and the copyright reserved

Used on dwg MANUAL

P255900

Quantity D	Quantity C	Quantity B	Quantity A	No	Description	Detail No		OEM Part No
		3		1	MOVING CONTACT ASSEMBLY	P255002/A		
	12	12	12	2	FIXED CONTACT ASSEMBLY	P255003/A		
			3	3	MOVING CONTACT ASSEMBLY	P255002/B		
	6			4	ARCING CONTACT	P255001/4		
				5	MAIN CONTACT	P255001/5		

GROUP A - FULL FIXED AND MOVING CONTACT SET
GROUP B - FULL FIXED AND MOVING CONTACT SET (WITHOUT MOVING ASSY SUPPORT BOARDS)
GROUP C - FIXED CONTACT ASSEMBLIES AND MOVING ARCING CONTACT SET

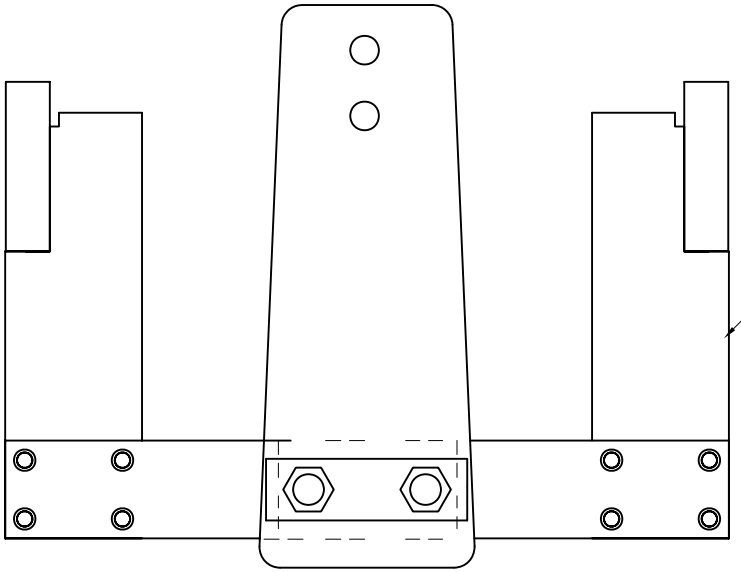

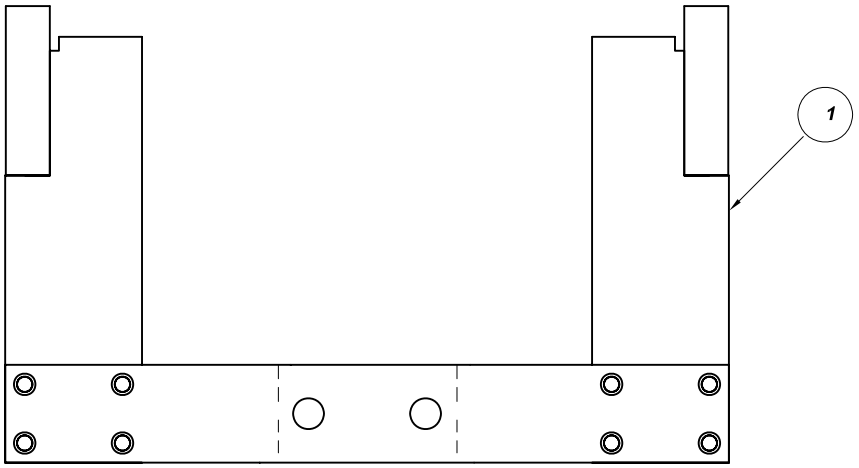

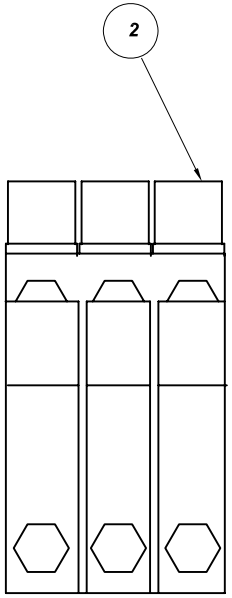

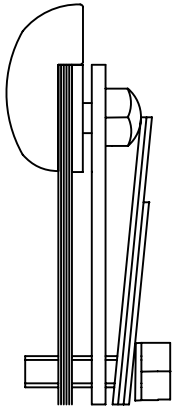

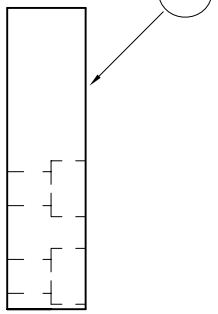

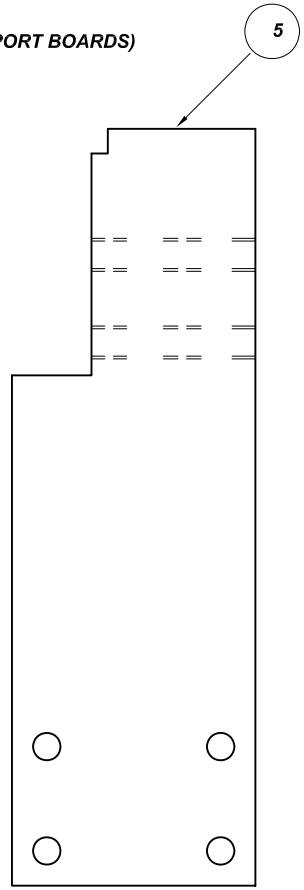

No	Revision notes	Date/Sig	No	Revision notes	Date/Sig	No	Revision notes	Date/Sig

Powerserve UK Limited
SERVING ELECTRICAL UTILITIES

TO CONTACT US
TEL: +44(0)1279-418630
FAX: +44(0)1279-210097
WEB: www.powerserveuk.com
EMAIL: info@powerserveuk.com

PATTERN FIXED & MOVING CONTACT ASSEMBLIES FOR ELLISON SWITCHGEAR

Scale NTS | Drawn ACS | Checked AJT | Approved AJT | Date 01/03/10

RE No | Sheet No | P255900 | REV 0

TO CONTACT US - TEL: +44(0)1279-418630 WEB: www.powerserveuk.com EMAIL: info@powerserveuk.com

All information contained in this document is confidential and the copyright reserved

Used on dwg MANUAL

P259900

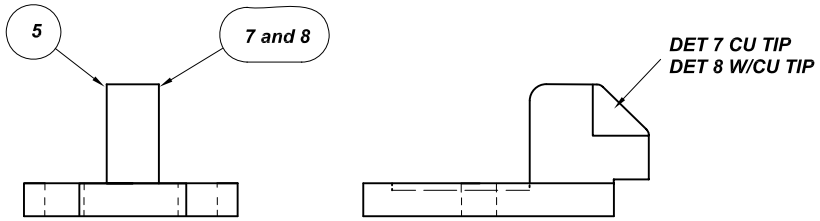

Quantity D	Quantity C	Quantity B	Quantity A	No	Description	Detail No	Nat Com No	OEM Part No
			24	1	FIXED CONTACT FINGER ASSY	P259012/A		
			3	2	MOVING CONTACT ASSY	P259004/A	875 0600	57963M140-S
				3	FIXED CONTACT FLEX (LH & RH)	P259014/A		
				4	TURBULATOR	P259013/A		
				5	ARCING CONTACT	P259015/1	875 0610	
				6	GASKET	P259017/1	875 0680	
				7	ARCING CONTACT (REFIRBISHED)	P259015/A		
				8	ARCING CONTACT (REFIRBISHED)	P259015/B		

GROUP A - FIXED AND MOVING CONTACT SET

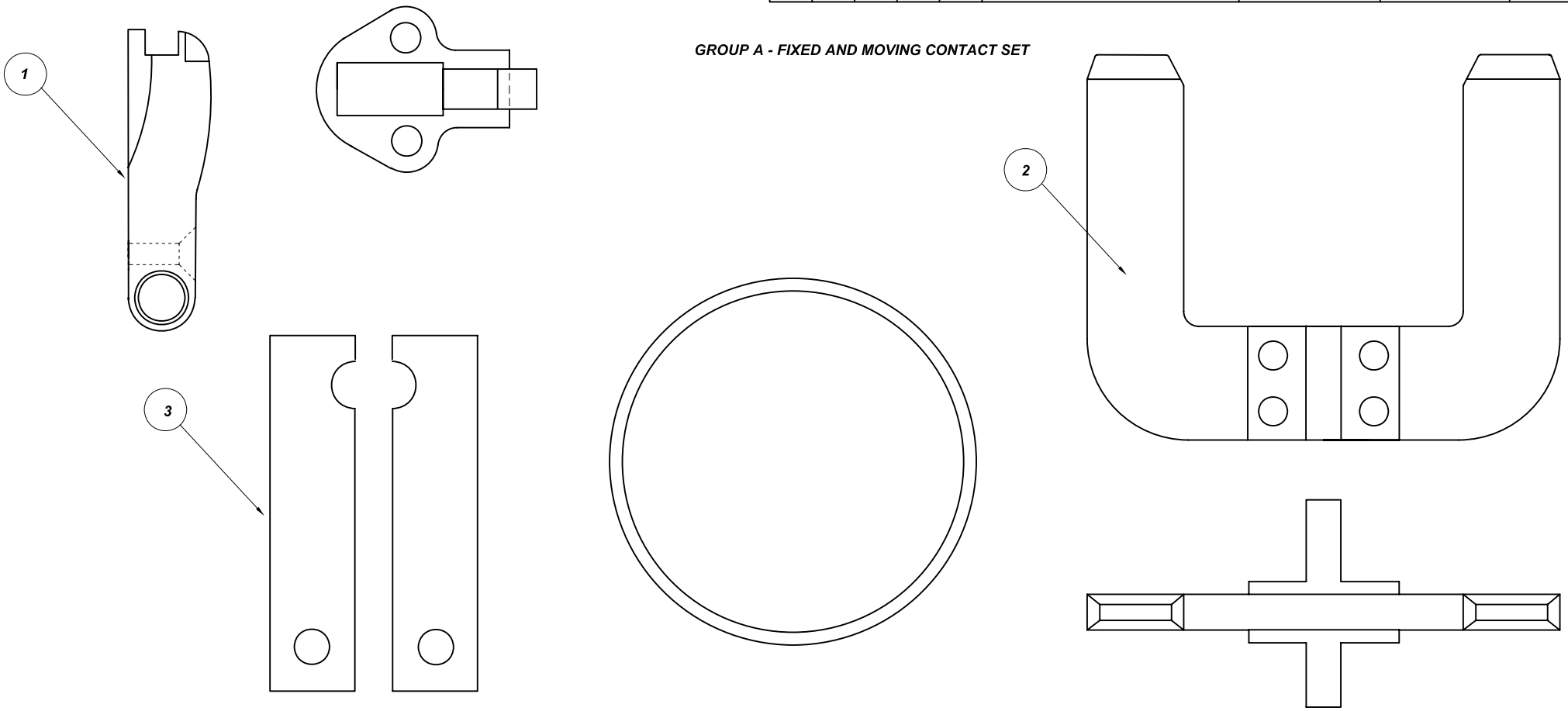

No	Revision notes	Date/Sig	No	Revision notes	Date/Sig	No	Revision notes	Date/Sig

Powerserve UK Limited
SERVING ELECTRICAL UTILITIES

TO CONTACT US
TEL: +44(0)1279-418630
FAX: +44(0)1279-210097
WEB: www.powerserveuk.com
EMAIL: info@powerserveuk.com

PATTERN CONTACTS FOR ENGLISH ELECTRIC TYPE OLX SWITCHGEAR

Scale NTS | Drawn ACS | Checked AJT | Approved AJT | Date 01/03/10

RE No | Sheet No | P259900 | REV 0

TO CONTACT US - TEL: +44(0)1279-418630 WEB: www.powerserveuk.com EMAIL: info@powerserveuk.com

All information contained in this document is confidential and the copyright reserved

Used on dwg MANUAL

P259902

Quantity D	Quantity C	Quantity B	Quantity A	No	Description	Detail No		OEM Part No
				1	FIXED CONTACT ASSY	P259030/A		
				2	MOVING CONTACT ASSY	P259029/1		
				3	FIXED CONTACT ASSY	P259038/A		
				4	MAIN CONTACT FINGER (FOR DET 1)	P259031/1		
				5	ARCING CONTACT FINGER (FOR DET 1)	P259031/A		
				6	MAIN CONTACT FINGER (FOR DET 3)	P259037/1		
				7	ARCING CONTACT FINGER (FOR DET 3)	P259037/A		
				8	TANK GASKET	P259035/1		

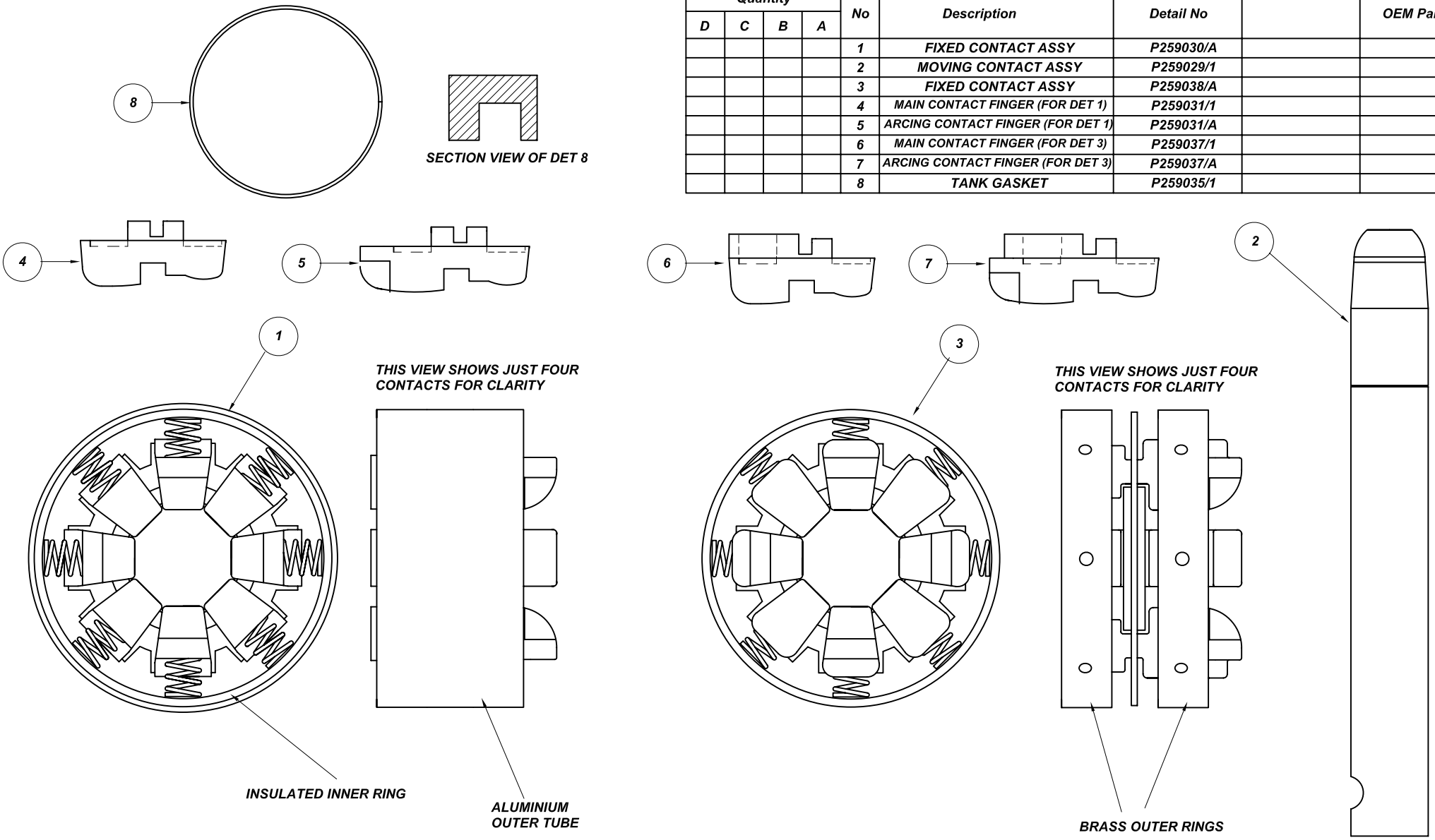

No	Revision notes	Date/Sig	No	Revision notes	Date/Sig	No	Revision notes	Date/Sig

Powerserve UK Limited
SERVING ELECTRICAL UTILITIES

TO CONTACT US
TEL: +44(0)1279-418630
FAX: +44(0)1279-210097
WEB: www.powerserveuk.com
EMAIL: info@powerserveuk.com

Scale NTS | Drawn ACS | Checked AJT | Approved AJT | Date 01/03/10

PATTERN FIXED & MOVING CONTACTS AND TANK GASKET FOR E.ELEC TYPE OKM4 SWGR

RE No | Sheet No | P259902 | REV 0

TO CONTACT US - TEL: +44(0)1279-418630 WEB: www.powerserveuk.com EMAIL: info@powerserveuk.com

All information contained in this document is confidential and the copyright reserved

Used on dwg MANUAL

P259907

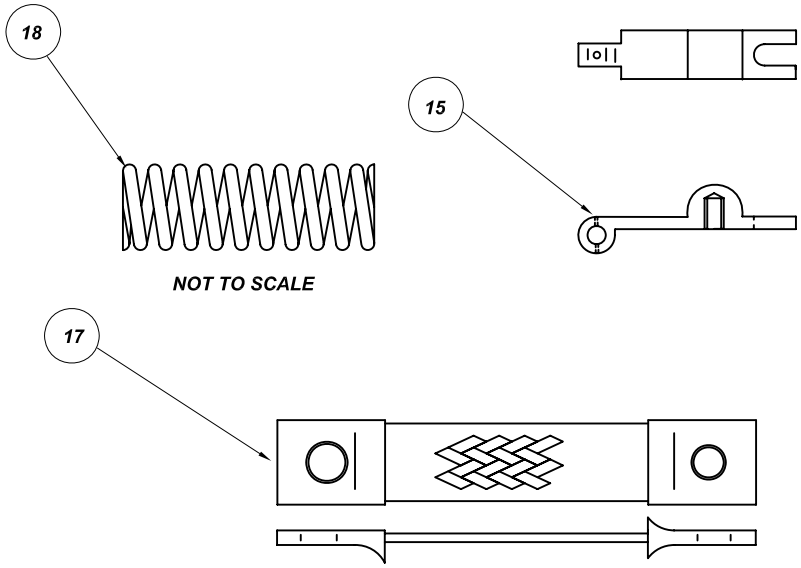

Quantity G	Quantity F	Quantity E	Quantity D	Quantity C	Quantity B	Quantity A	No	Description	Detail No	NAT COM No	OEM Part No
							1				
							2				
					12		3	MOVING CONTACT	P259009/A	35/37/890	S8312S863 Ref 14
					12		4	FIXED CONTACT	P259009/B	35/37.893	S8312S683 Ref 16
				12			5	MOVING CONTACT	P259009/G	35/37/889	S8312S683 Ref 8
				12			6	FIXED CONTACT	P259009/H	35/37/892	S8312S683 Ref 11
			12				7	MOVING CONTACT	P259009/E	35/37/888	S8312S683 Ref 3
			12				8	FIXED CONTACT	P259009/F	35/37/891	S8312S683 Ref 5
		12					9	MOVING CONTACT-SILVER PLATED	P259009/13		
		12					10	FIXED CONTACT-SILVER PLATED	P259009/14		
	12						11	MOVING CONTACT-SILVER PLATED	P259009/17		
	12						12	FIXED CONTACT-SILVER PLATED	P259009/18		
12							13	MOVING CONTACT-SILVER PLATED	P259009/15		
12							14	FIXED CONTACT-SILVER PLATED	P259009/16		
							15	FIXED CONTACT SELECTOR	P259010/1		
							16	SCREW	P259010/2		
							17	FLEXIBLE CONNECTION	P259020/A		
							18	DIVERTER CONTACT SPRING	P259027/A		
							19	FLEXIBLE CONNECTION	P259046/A		

GROUP B - 1/2" WIDE FIXED AND MOVING CONTACT SET
GROUP C - 3/4" WIDE FIXED AND MOVING CONTACT SET
GROUP D - 1" WIDE FIXED AND MOVING CONTACT SET
GROUP E - 1/2" WIDE FIXED AND MOVING CONTACT SET (SILVER PLATED)
GROUP F - 3/4" WIDE FIXED AND MOVING CONTACT SET (SILVER PLATED)
GROUP G - 1" WIDE FIXED AND MOVING CONTACT SET (SILVER PLATED)

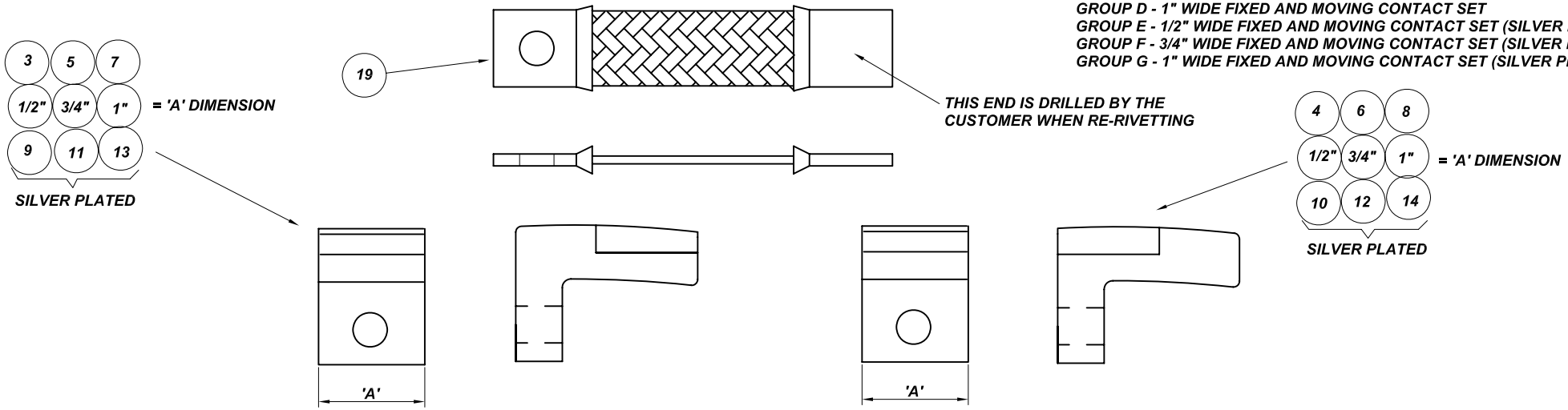

No	Revision notes	Date/Sig	No	Revision notes	Date/Sig	No	Revision notes	Date/Sig

Powerserve UK Limited
SERVING ELECTRICAL UTILITIES

TO CONTACT US
TEL: +44(0)1279-418630
FAX: +44(0)1279-210097
WEB: www.powerserveuk.com
EMAIL: info@powerserveuk.com

PATTERN FIXED & MOVING DIVERTER CONTACTS FOR ENGLISH ELECTRIC N.E T/C

Scale NTS | Drawn ACS | Checked AJT | Approved AJT | Date 01/03/10

RE No | Sheet No | P259907 | REV 0

TO CONTACT US - TEL: +44(0)1279-418630 WEB: www.powerserveuk.com EMAIL: info@powerserveuk.com

All information contained in this document is confidential and the copyright reserved

Used on dwg MANUAL

P259911

Quantity D	Quantity C	Quantity B	Quantity A	No	Description	Detail No		OEM Part No
				1	CONTACT (TIPPED)	P259036/A		
				2	CONTACT	P259040/1		
				3	CONTACT	P259024/1		

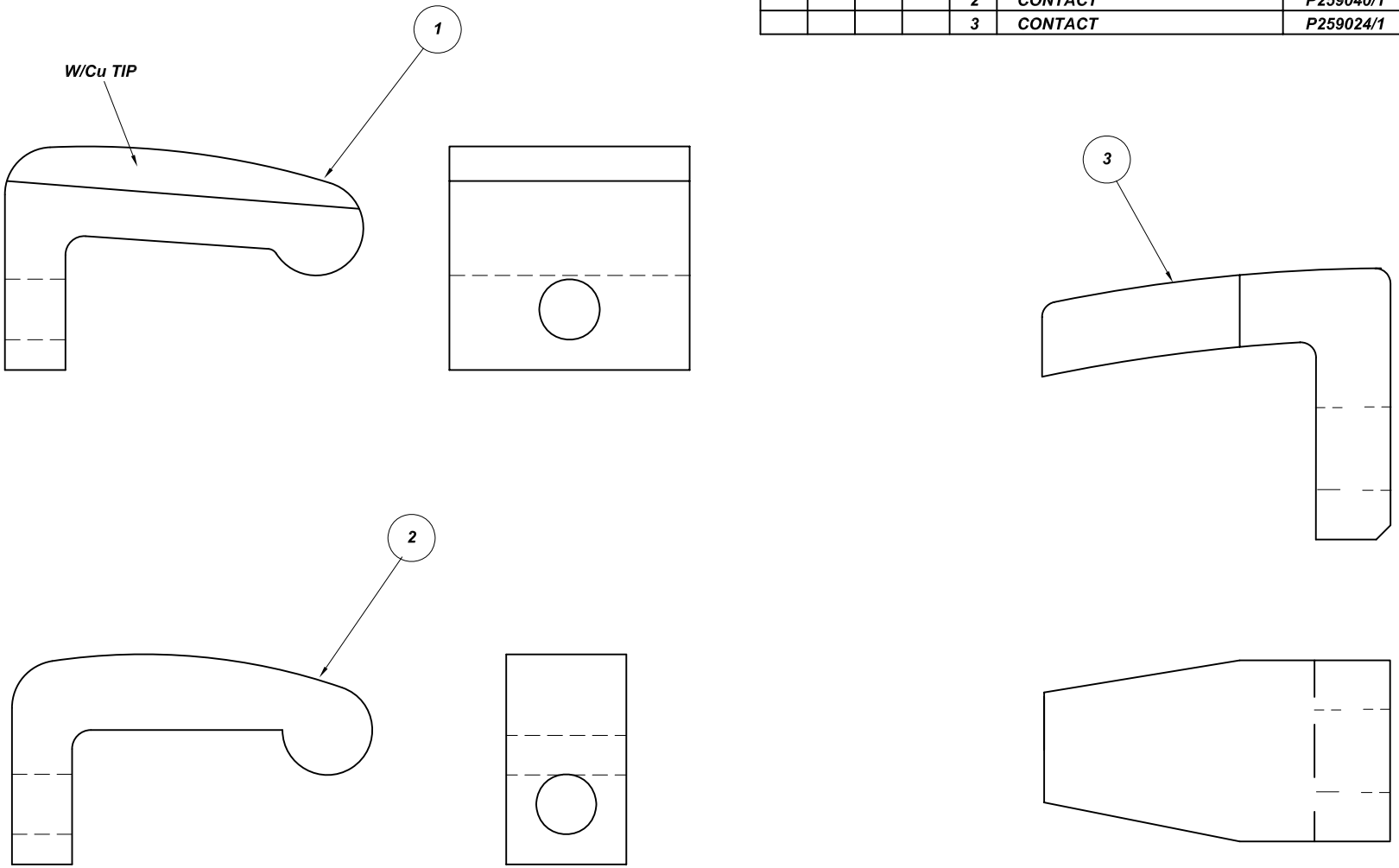

No	Revision notes	Date/Sig	No	Revision notes	Date/Sig	No	Revision notes	Date/Sig

Powerserve UK Limited
SERVING ELECTRICAL UTILITIES

TO CONTACT US
TEL: +44(0)1279-418630
FAX: +44(0)1279-210097
WEB: www.powerserveuk.com
EMAIL: info@powerserveuk.com

Scale NTS | Drawn ACS | Checked AJT | Approved AJT | Date 01/03/10

PATTERN CONTACTS FOR ENGLISH ELECTRIC T/C'S

RE No | Sheet No | P259911 | REV 0

TO CONTACT US - TEL: +44(0)1279-418630 WEB: www.powerserveuk.com EMAIL: info@powerserveuk.com

All information contained in this document is confidential and the copyright reserved

Used on dwg MANUAL

P259912

Quantity D	Quantity C	Quantity B	Quantity A	No	Description	Detail No		OEM Part No
				1	SELECTOR MOVING CONTACT	P259042/1		
				2	DIVERTER SWITCH SPRING	P259044/1		
				3	SELECTOR MOVING CONT SPRING	P259044/2		
				4	SELECTOR MOVING CONT BRAID	P259043/A		
				5	SELECTOR MOVING CONT SCREW	P259044/5		
				6	SELECTOR FIXED CONTACT STUD	P259044/3		
				7	SELECTOR FIXED CONT LOCKNUT	P259044/4		

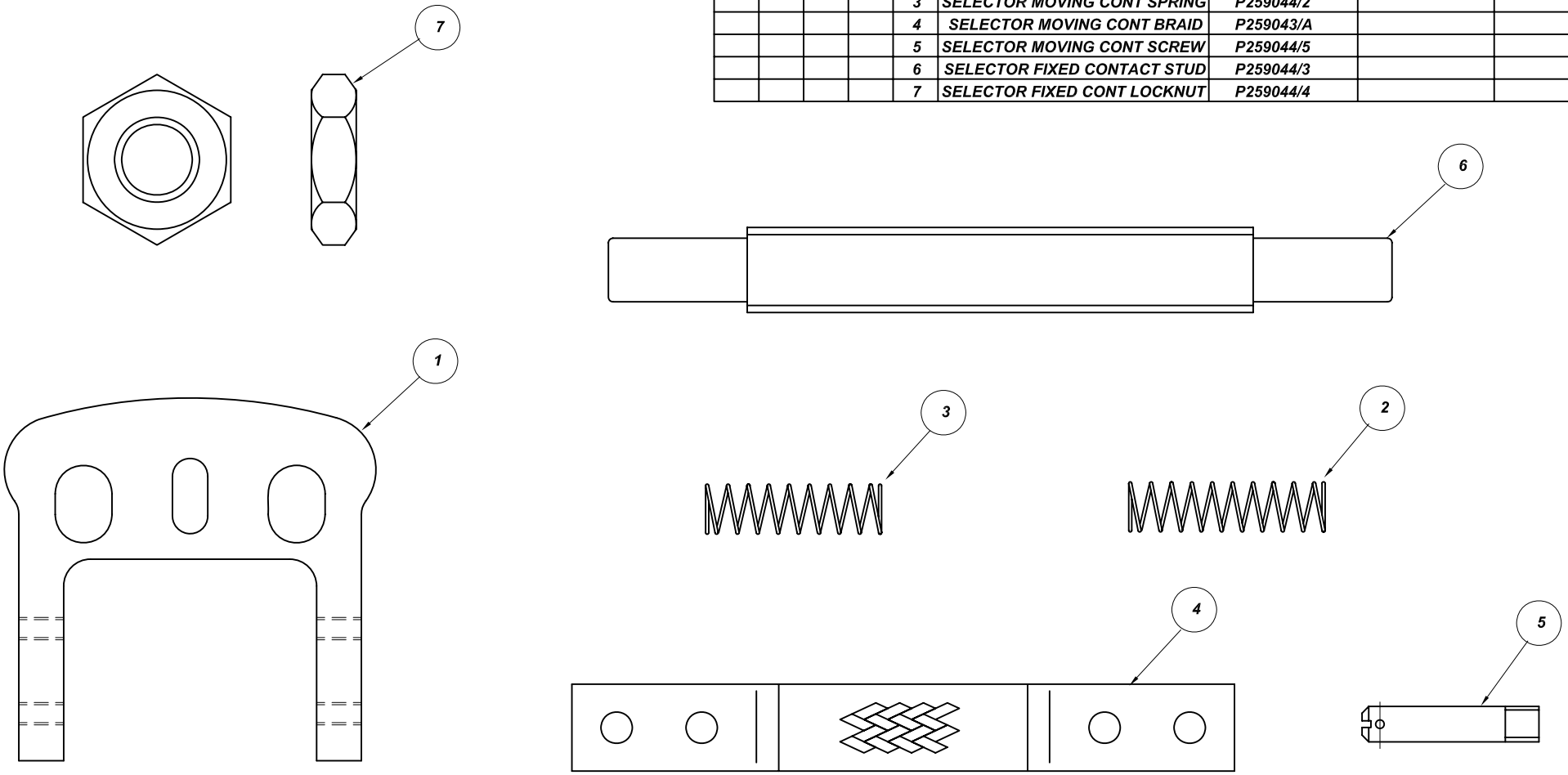

No	Revision notes	Date/Sig	No	Revision notes	Date/Sig	No	Revision notes	Date/Sig

Powerserve UK Limited
SERVING ELECTRICAL UTILITIES

TO CONTACT US
TEL: +44(0)1279-418630
FAX: +44(0)1279-210097
WEB: www.powerserveuk.com
EMAIL: info@powerserveuk.com

Scale NTS | Drawn ACS | Checked AJT | Approved AJT | Date 01/03/10

PATTERN CONTACTS AND PARTS FOR AND ENGLISH ELECTRIC REACTOR T/C

RE No P259912 REV 0

Sheet No

TO CONTACT US - TEL: +44(0)1279-418630 WEB: www.powerserveuk.com EMAIL: info@powerserveuk.com

All information contained in this document is confidential and the copyright reserved

Used on dwg MANUAL

P259913

Quantity D	Quantity C	Quantity B	Quantity A	No	Description	Detail No		OEM Part No
			1	1	SEL COVER GASKET (TOP)	P259045/1		
			1	2	SEL COVER GASKET (FRONT)	P259045/2		
			3	3	DIV GASKET (INDIVIDUAL)	P259045/3		
			1	4	DIVERTER MAIN GASKET	P259045/4		

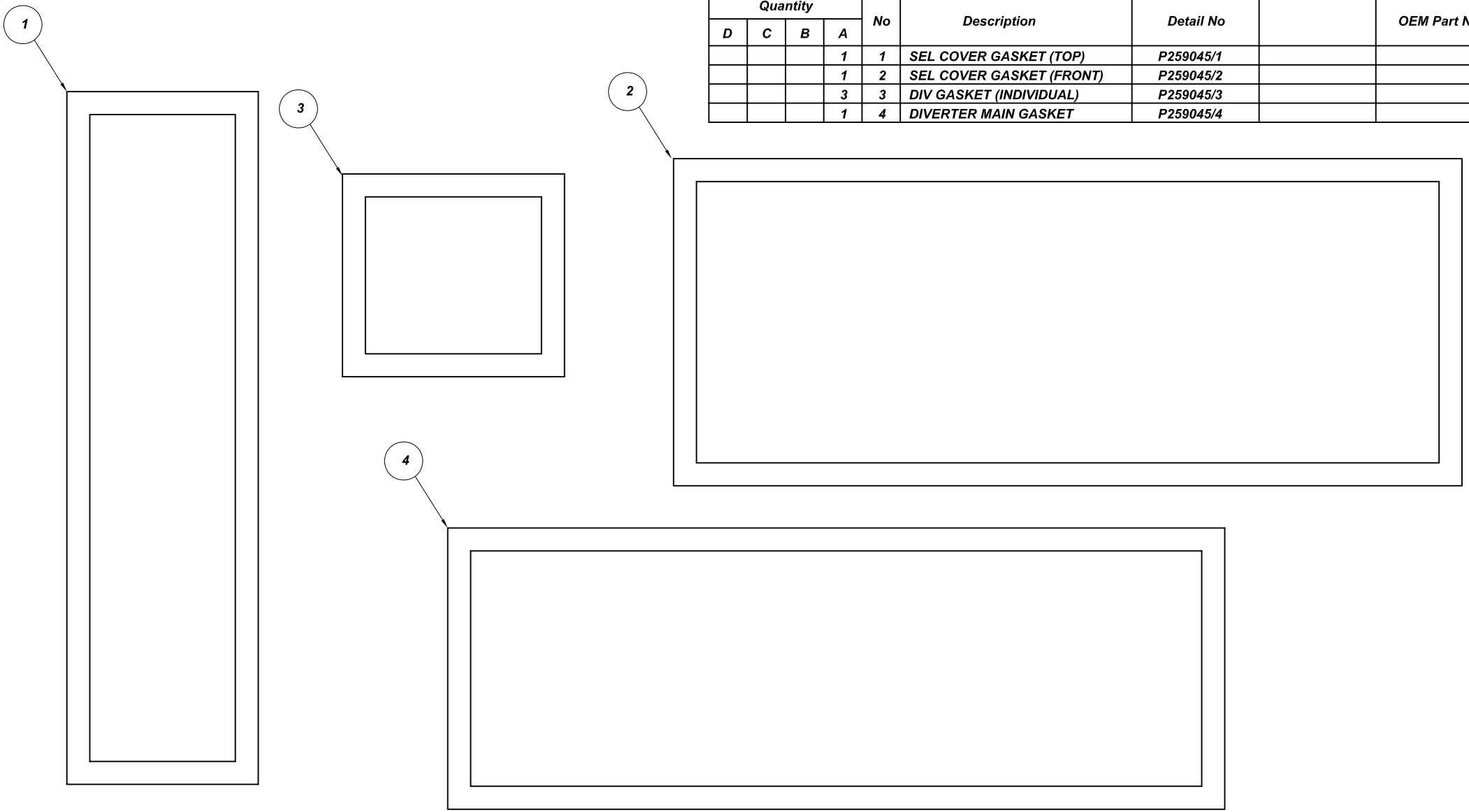

No	Revision notes	Date/Sig	No	Revision notes	Date/Sig	No	Revision notes	Date/Sig

Powerserve UK Limited
SERVING ELECTRICAL UTILITIES

TO CONTACT US
TEL: +44(0)1279-418630
FAX: +44(0)1279-210097
WEB: www.powerserveuk.com
EMAIL: info@powerserveuk.com

Scale NTS | Drawn ACS | Checked AJT | Approved AJT | Date 01/03/10

PATTERN GASKETS FOR ENGLISH ELECTRIC REACTOR TAPCHANGER

RE No P259913 REV 0

Sheet No

TO CONTACT US - TEL: +44(0)1279-418630 WEB: www.powerserveuk.com EMAIL: info@powerserveuk.com

All information contained in this document is confidential and the copyright reserved

Used on dwg MANUAL

P259914

Quantity D	Quantity C	Quantity B	Quantity A	No	Description	Detail No		OEM Part No
				1	MOVING CONTACT	P259047/A		S1676M0382
				2	FIXED CONTACT	P259047/B		S1676M0381

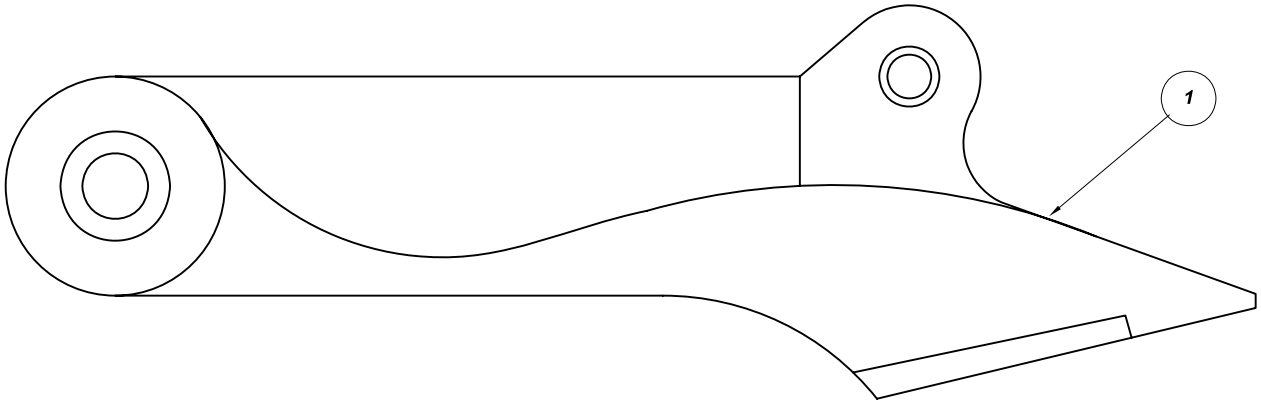

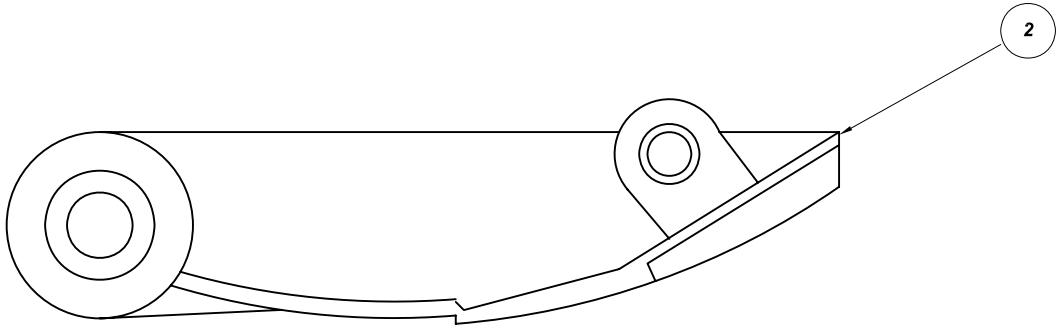

No	Revision notes	Date/Sig	No	Revision notes	Date/Sig	No	Revision notes	Date/Sig

Powerserve UK Limited
SERVING ELECTRICAL UTILITIES

TO CONTACT US
TEL: +44(0)1279-418630
FAX: +44(0)1279-210097
WEB: www.powerserveuk.com
EMAIL: info@powerserveuk.com

PATTERN DIVERTER CONTACTS FOR ENGLISH ELECTRIC TYPE FDA/FDB T/C'S

Scale NTS | Drawn ACS | Checked AJT | Approved AJT | Date 05/03/10

RE No | Sheet No | P259914 | REV 0

TO CONTACT US - TEL: +44(0)1279-418630 WEB: www.powerserveuk.com EMAIL: info@powerserveuk.com

All information contained in this document is confidential and the copyright reserved

Used on dwg MANUAL

P259915

Quantity D	Quantity C	Quantity B	Quantity A	No	Description	Detail No		OEM Part No
				1	MOVING CONTACT	P259051/B		S1676S0364
				2	FIXED CONTACT	P259051/A		S1676S0361

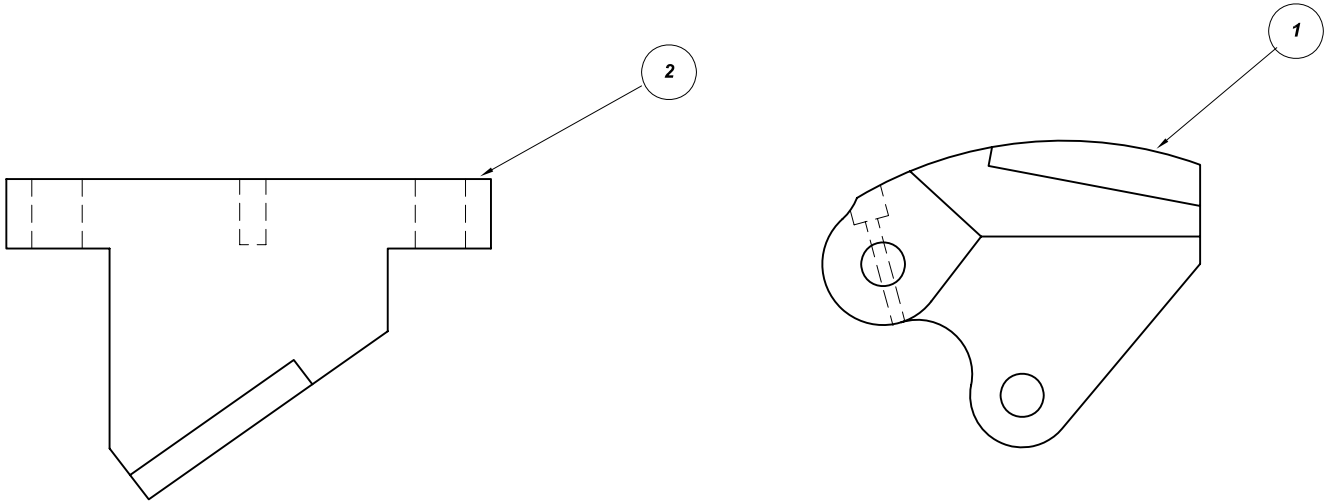

No	Revision notes	Date/Sig	No	Revision notes	Date/Sig	No	Revision notes	Date/Sig

Powerserve UK Limited
SERVING ELECTRICAL UTILITIES

TO CONTACT US
TEL: +44(0)1279-418630
FAX: +44(0)1279-210097
WEB: www.powerserveuk.com
EMAIL: info@powerserveuk.com

PATTERN DIVERTER CONTACTS FOR ENGLISH ELECTRIC TYPE FDC/FDD T/C'S

Scale NTS | Drawn ACS | Checked AJT | Approved AJT | Date 05/03/10

RE No | Sheet No | P259915 | REV 0

TO CONTACT US - TEL: +44(0)1279-418630 WEB: www.powerserveuk.com EMAIL: info@powerserveuk.com

All information contained in this document is confidential and the copyright reserved

Used on dwg MANUAL

P300905

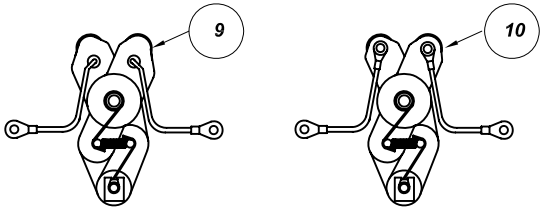

GROUP C - RATCHET SCISSOR ARM SET
GROUP D - NON-RATCHET SCISSOR ARM SET

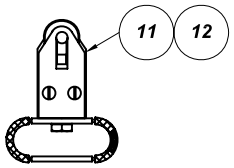

GROUP E - MOVING CONTACT SET
GROUP F - SILVER PLATED MOVING CONTACT SET (400 AMPS)

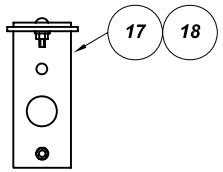

DET 17 - STD CONTACT PLATE
DET 18 - SILVER PLATED CONTACT PLATE (400 AMPS)

Quantity K	Quantity J	Quantity H	Quantity G	Quantity F	Quantity E	Quantity D	Quantity C	Quantity B	Quantity A	No	Description	Detail No		OEM Part No
									102	1	PAWL SPRING	P300126/1		562036-2
		51	102					51	102	2	RATCHET CONTACT	P300125/1		561268-1
								102	153	3	PLAIN WASHER 10/15-0.8			9405003
								51	51	4	SPRING	P900002/19		020040-162
								51	51	5	SLEEVE	P300127/1		561293-1
		51	51					51	51	6	MAIN RATCHET CONTACT	P300010/1		561270-2
		51						51		7	NON RATCHET CONTACT	P300028/6		313607-6
								51	51	8	SCREW (FOR FIXED CONT ASSY)			
							3			9	SCISSOR ARM-RATCHET	P300228/A		591801-A
						3				10	SCISSOR ARM-NON RATCHET	P300008/A		571890-B
					3					11	MAIN MOVING CONTACT	P300091/A		561281-A
				3						12	MAIN MOVING CONTACT-PLATED	P300091/B		
	6									13	CHANGE-OVER CONTACT	P300098/1		
6										14	CHANGE-OVER CONTACT-PLATED	P300098/2		
										15	INSPECTION COVER GASKET-44Kv	P900001/1		130903-481
										16	INSPECTION COVER GASKET-66Kv	P900001/5		561748-1
										17	CONTACT PLATE ASSEMBLY	P300251/A		561282-A
										18	CONTACT PLATE ASSEMBLY (SP)	P300251/B		561282-B

FOR OTHER AT PARTS SEE DRAWING P300924

FOR 66Kv AT 16

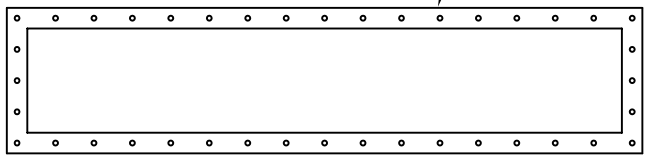

FOR 44Kv AT 15

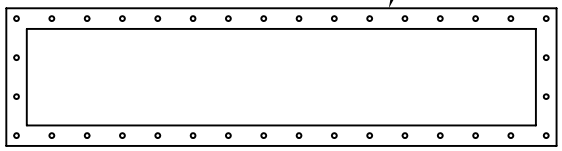

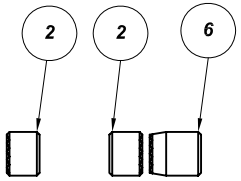

GROUP G - RATCHET FIXED CONTACT SET

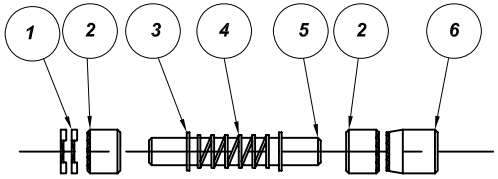

DET 8 NOT SHOWN

GROUP A - FULL RATCHET FIXED CONTACT SET
REPLACES OEM PART No 563146-A

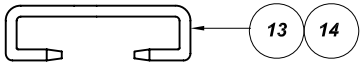

GROUP J - CHANGE-OVER CONTACT SET
GROUP K - SILVER PLATED CHANGE OVER CONTACT SET (350 AMPS)

NOTES-

1. RATCHET ROLLER CONTACTS AND RATCHET SCISSOR ARMS CAN ONLY BE USED TOGETHER. PERMISSABLE GROUP COMBINATIONS ARE AS FOLLOWS:-
GROUPS A & C, GROUPS B & D, GROUPS G & C AND GROUPS H & D

2. QUANTITIES ARE PER TAPCHANGER

3. WHEN THE UNIT IS USED WITH EITHER COURSE-FINE OR REVERSE-REGULATION WINDINGS (WHERE A CHANGE-OVER SWITCH IS FITTED), THE QUANTITIES FOR PARTS IN GROUPS A, B, G AND H WILL INCREASE. PLEASE REFER TO POWERSERVE UK LTD

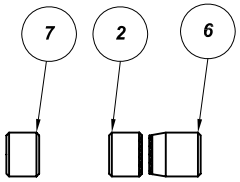

GROUP H - NON-RATCHET FIXED CONTACT SET

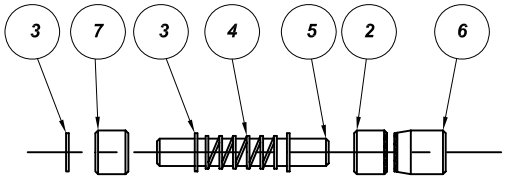

DET 8 NOT SHOWN

GROUP B - FULL NON-RATCHET FIXED CONTACT SET

No	Revision notes	Date/Sig	No	Revision notes	Date/Sig	No	Revision notes	Date/Sig

Powerserve UK Limited
SERVING ELECTRICAL UTILITIES

TO CONTACT US
TEL: +44(0)1279-418630
FAX: +44(0)1279-210097
WEB: www.powerserveuk.com
EMAIL: info@powerserveuk.com

Scale NTS | Drawn ACS | Checked AJT | Approved AJT | Date 10/03/10

PARTS FOR FULLER ATL TYPE AT TAPCHANGERS 44Kv AND 66Kv

RE No | Sheet No | P300905 | REV 0

Form No 3-7.3.6-A3 Rev B

TO CONTACT US - TEL: +44(0)1279-418630 WEB: www.powerserveuk.com EMAIL: info@powerserveuk.com

All information contained in this document is confidential and the copyright reserved

Used on dwg MANUAL

P300906

THIS CONTACT IS SUITABLE FOR MAX 100 Amps
FOR HIGHER CURRENT USE CONTACT P300105/A.
THIS CONTACT HAS BEEN SUPERCEEDED BY P300105/A

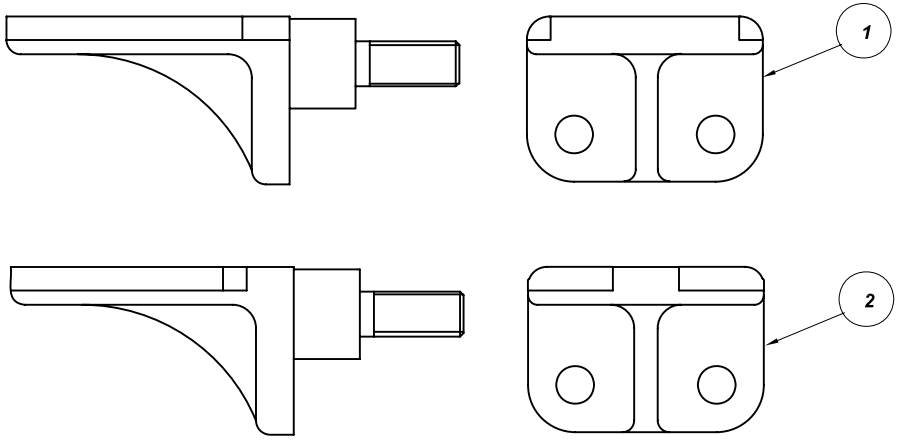

Quantity D	Quantity C	Quantity B	Quantity A	No	Description	Detail No		OEM Part No
				1	FIXED CONTACT ASSY (100 Amp)	P300110/AR	REFURB ONLY	216066
				2	FIXED CONTACT ASSY	P300105/A		315271
				3	FIXED CONTACT ASSY	P300109/A		311163
				4	FIXED CONTACT ASSY	P300108/A		311185
	1			5	FIXED CONTACT ASSY	P300104/B		
		1		6	FIXED CONTACT ASSY	P300225/AR	REFURB ONLY	570673-B
			1	7	FIXED CONTACT ASSY	P300721/A		570673-A
				8	FIXED CONTACT ASSY	P300107/A		312702
			1	9	CONTACT FIXING KIT	P300113/A		560817-A
	1	1		10	CONTACT FIXING KIT	P300113/B		560817-B

SEE DRAWING P300907 FOR OTHER F PARTS

7 — SUPPLIED AS A REPLACEMENT TO P300107/A AND SUPPLIED WITH FIXING KIT (P300113/A) -SEE GROUP A

6 — SUPPLIED AS A REPLACEMENT TO P300107/A AND SUPPLIED WITH FIXING KIT (P300113/B) -SEE GROUP B

SPECIAL FIXED CONTACT - EARLY MK2 33/44 kV 100-300 Amp

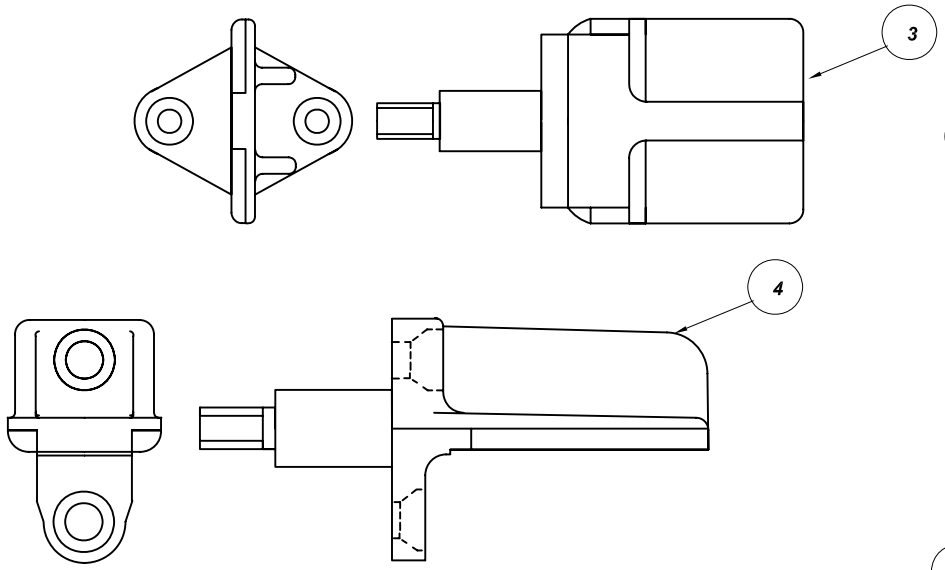

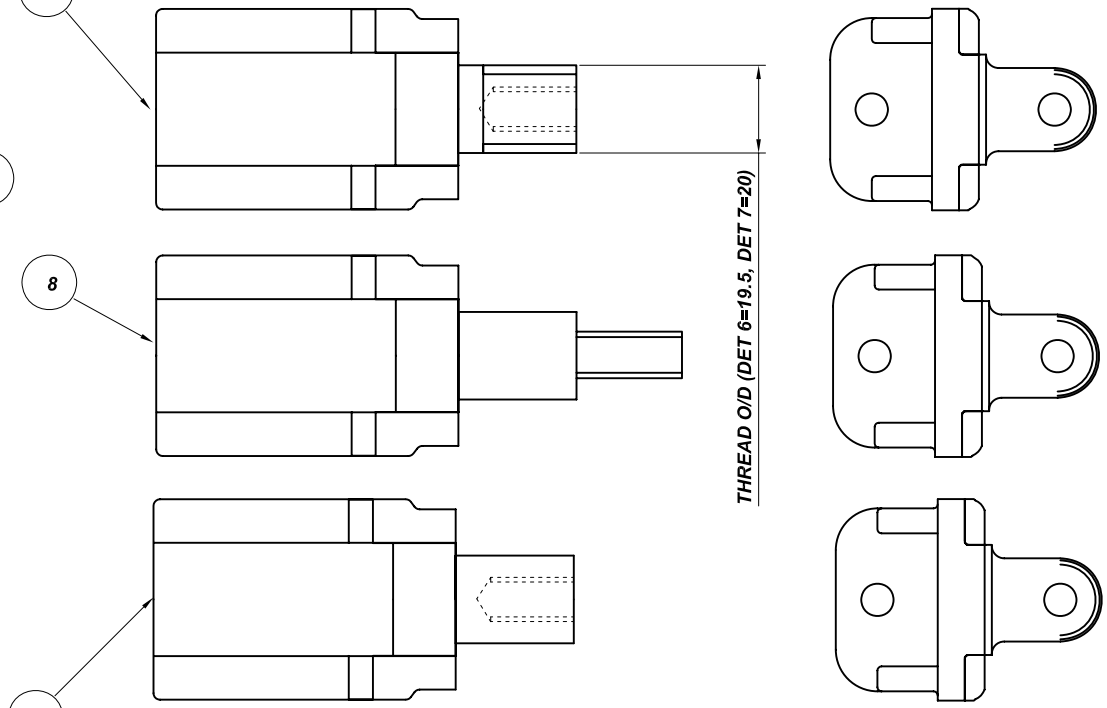

5 — SUPPLIED AS A REPLACEMENT TO P300107/A AND SUPPLIED WITH FIXING KIT (P300113/B) -SEE GROUP C

No	Revision notes	Date/Sig	No	Revision notes	Date/Sig	No	Revision notes	Date/Sig

Powerserve UK Limited
SERVING ELECTRICAL UTILITIES

TO CONTACT US
TEL: +44(0)1279-418630
FAX: +44(0)1279-210097
WEB: www.powerserveuk.com
EMAIL: info@powerserveuk.com

FIXED SELECTOR CONTACTS FOR FULLER TYPE F MK1 & MK2 TAPCHANGERS

Scale NTS | Drawn ACS | Checked AJT | Approved AJT | Date 05/03/10

RE No | Sheet No | P300906 | REV 0

Form No 3-7.3.6-A3 Rev B

TO CONTACT US - TEL: +44(0)1279-418630 WEB: www.powerserveuk.com EMAIL: info@powerserveuk.com

All information contained in this document is confidential and the copyright reserved

Used on dwg MANUAL

P300907

NOTE: TYPICAL REPLACEMENT PARTS ONLY SHOWN, ALL COMPONENTS AVAILABLE

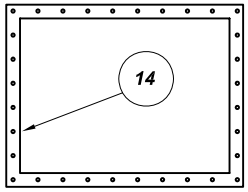

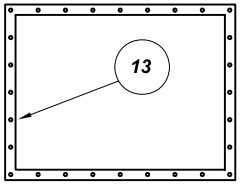

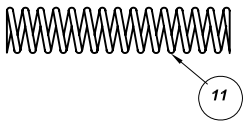

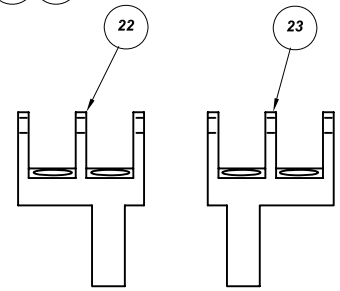

Quantity								Quantity				No	Description	Detail No		OEM Part No
M	L	K	J	H	G	F	E	D	C	B	A					
						6	6			6	6	1	MK 2 MAIN CONTACT	P300027/A		311184-A
				6	6			6	6			2	MK 1 MAIN CONTACT	P300003/A		217380-A
									3		3	3	ROLLER CONTACT	P300004/A		318389-A
									3		3	4	ROLLER CONTACT	P300004/B		318389-B
								3		3		5	ROLLER CONTACT	P300004/C		318389-C
								3		3		6	ROLLER CONTACT	P300004/D		318389-D
					3		3					7	ROLLER CONTACT	P300004/E		318389-E
					3		3					8	ROLLER CONTACT	P300004/F		318389-F
				3		3						9	ROLLER CONTACT	P300004/G		318389-G
				3		3						10	ROLLER CONTACT	P300004/H		318389-H
												11	CONTACT SPRING(REPLACEMENT)	P300115/3		220711-3
												12	CONTACT SPRING (UPGRADE)	P300114/2		311162-2
												13	INSPECTION COVER GASKET-MK1	P900001/4		
												14	INSPECTION COVER GASKET-MK2	P900001/2		130903-86
												15	LOCKING RINGS	P947012		
			3									16	TRANSITION RESISTOR-MK1	P300223	SEE NOTE	121979
		3										17	TRANSITION RESISTOR-MK2	P300206	SEE NOTE	132950
												18	SPECIAL SCREW	P300023/1		013326-1
												19	FLEXIBLE CONNECTION(LOOSE)	P300026-Various		
												20	CONTACT SPRING	P300114/1		311162-1
												21	SPECIAL SCREW	P300023/2		013326-2
												22	CONTACT HOLDER -LEFT HAND	P300239/1		124801
												23	CONTACT HOLDER -RIGHT HAND	P300239/2		124801
												24	MECHANISM COUNTER	P300771/1		

SEE DRAWING P300906 FOR F SELECTOR FIXED CONTACTS

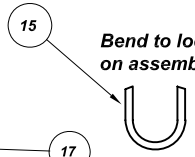

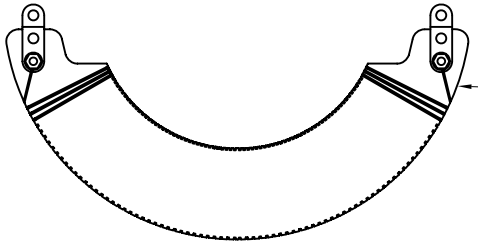

IMPORTANT
WHEN SPECIFYING THIS ASSEMBLY PLEASE QUOTE THE SERIAL No OF UNIT AND TRANSFORMER DETAILS TO ENSURE THE CORRECT RESISTOR SIZE IS REPLACED.

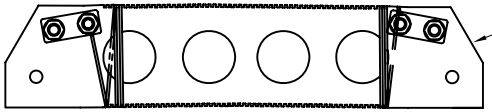

IMPORTANT
WHEN SPECIFYING THIS ASSEMBLY PLEASE QUOTE THE SERIAL No OF UNIT AND TRANSFORMER DETAILS TO ENSURE THE CORRECT RESISTOR SIZE IS REPLACED.

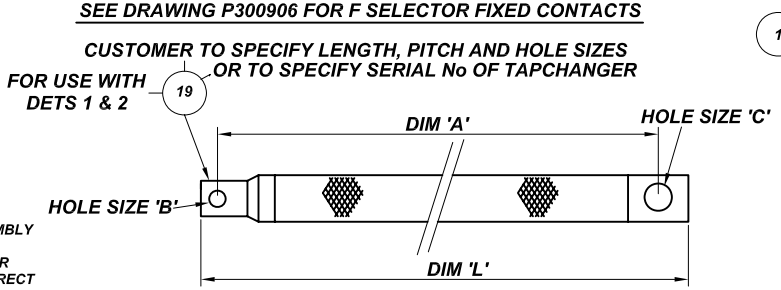

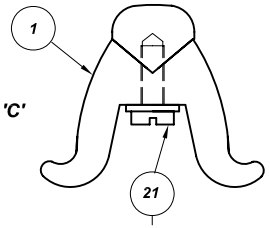

OPTIONAL

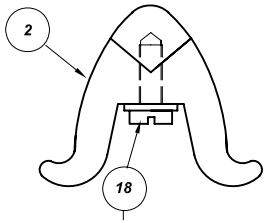

OPTIONAL

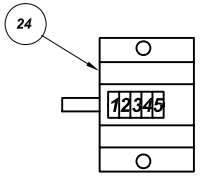

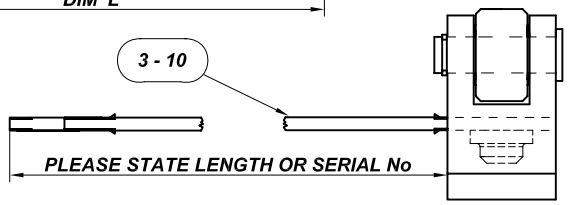

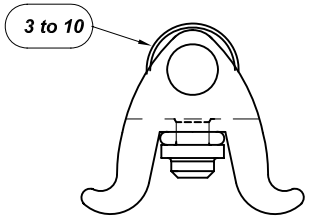

No	Revision notes	Date/Sig	No	Revision notes	Date/Sig	No	Revision notes	Date/Sig

Powerserve UK Limited
SERVING ELECTRICAL UTILITIES

TO CONTACT US
TEL: +44(0)1279-418630
FAX: +44(0)1279-210097
WEB: www.powerserveuk.com
EMAIL: info@powerserveuk.com

REPLACEMENT PARTS FOR FULLER TYPE F TAPCHANGERS MK1 & MK2

Scale NTS | Drawn ACS | Checked AJT | Approved AJT | Date 08/03/10

RE No P300907 REV 0

Sheet No

Form No 3-7.3.6-A3 Rev B

TO CONTACT US - TEL: +44(0)1279-418630 WEB: www.powerserveuk.com EMAIL: info@powerserveuk.com

All information contained in this document is confidential and the copyright reserved

Used on dwg MANUAL

P300908

Quantity D	Quantity C	Quantity B	Quantity A	No	Description	Detail No		OEM Part No
		24		1	ROLLER CONTACT	P300355/A		
		24		2	ROLLER CONTACT	P300355/B		
		3		3	BLADE CONTACT ARM	P300185/A		
			2	4	WAVY WASHER	P300024/2		
			1	5	MOVING CONTACT ROLLER	P300028/5		
			1	6	SPACER	P300339/8		
			1	7	RIVET	SR $\frac{5}{32}$" L=$\frac{3}{4}$"		
			1	8	PLATE	P300185/2		

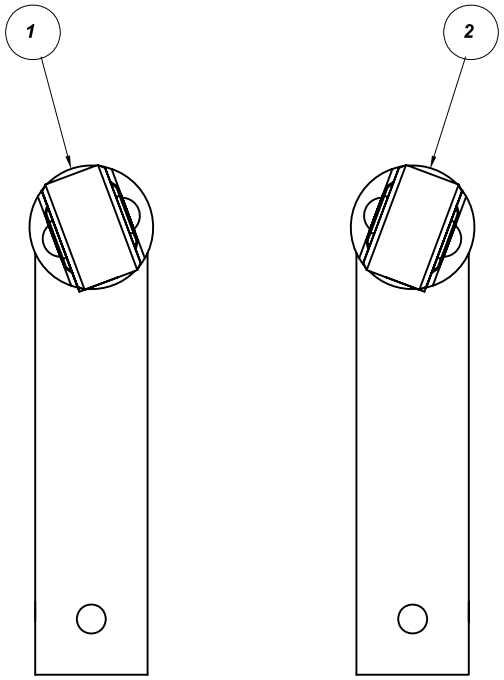

GRP A - MOVING CONTACT REFURBISHMENT KIT
GRP B - FULL SET OF FIXED ROLLER AND MOVING BLADE CONTACTS

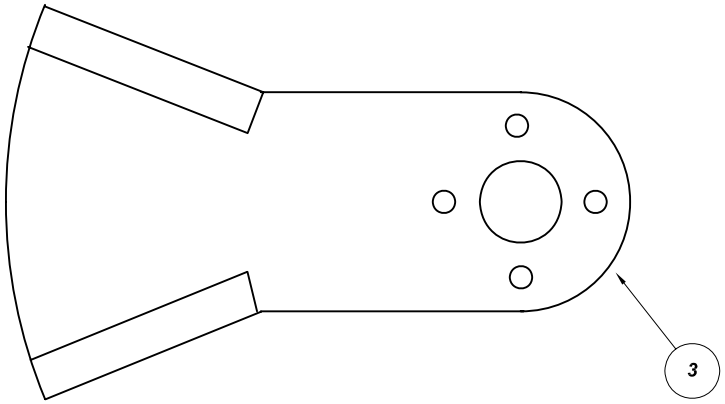

GRP A - MOVING CONTACT REFURBISHMENT KIT

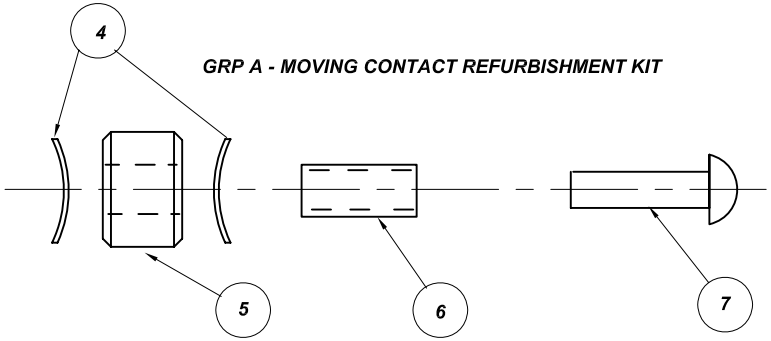

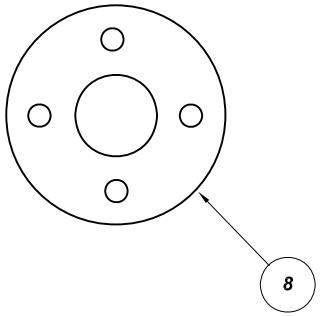

No	Revision notes	Date/Sig	No	Revision notes	Date/Sig	No	Revision notes	Date/Sig

Powerserve UK Limited
SERVING ELECTRICAL UTILITIES

TO CONTACT US
TEL: +44(0)1279-418630
FAX: +44(0)1279-210097
WEB: www.powerserveuk.com
EMAIL: info@powerserveuk.com

FIXED & MOVING CONTACTS FOR FULLER/ATL TYPE ASD TAPCHANGER

Scale NTS | Drawn ACS | Checked AJT | Approved AJT | Date 08/03/10

RE No P300908 REV 0

Sheet No

TO CONTACT US - TEL: +44(0)1279-418630 WEB: www.powerserveuk.com EMAIL: info@powerserveuk.com

All information contained in this document is confidential and the copyright reserved

Used on dwg MANUAL

P300909

GROUPS A & D

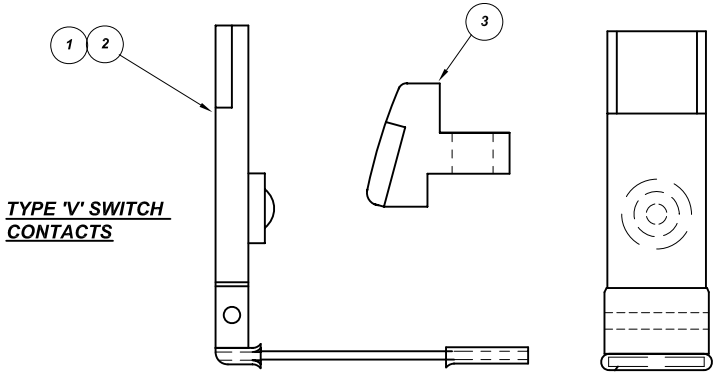

TYPE 'V' SWITCH CONTACTS

DET 1: FIXED CONTACT (LOW AMP) P300011/A

DET 2: FIXED CONTACT (HIGH AMP P300011/B)

DET 3: MOVING CONTACT 300-012-A

DET 11: PIN P900003/1 (NOT SHOWN)

CAN BE SUPPLIED WITH PINS (OPTIONAL EXTRA)

Quantity E	Quantity D	Quantity C	Quantity B	Quantity A	No	Description	Detail No		OEM Part No
				1	1	V SWITCH FIXED CONT. (Low Amp)	P300011/A		
	1				2	V SWITCH FIXED CONT (Hi Amp)	P300011/B		
	1			1	3	V SWITCH MOVING CONTACT	P300012/A		
			1		4	7F & 11F MOV CONTACT FINGER	P300051/A		
			1		5	7F & 11F FIXED CONTACT FINGER	P300050/A		
			1		6	GROUND PIN FOR DET 4	P300088/4		
					7	HARDENED SCREW FOR DET 4	P300902/4		
					8	7F & 11F MOVING CONTACT ASSY	P300055		
1		1			9	O SWITCH MOVING CONTACT	P300054/A		
		1			10	O SWITCH MAIN FIXED CONTACT	P300096/A		
	1			1	11	GROUND PIN FOR DETS 1 & 2	P900003/1		
					12	HS SELECTOR CONTACT	P300120		
1					13	O SWITCH RES FIXED CONTACT	P300096/B		

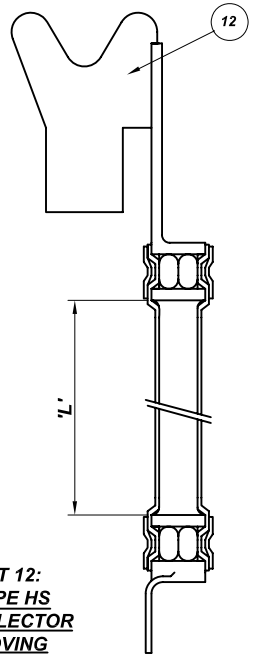

DET 12: TYPE HS SELECTOR MOVING CONTACT

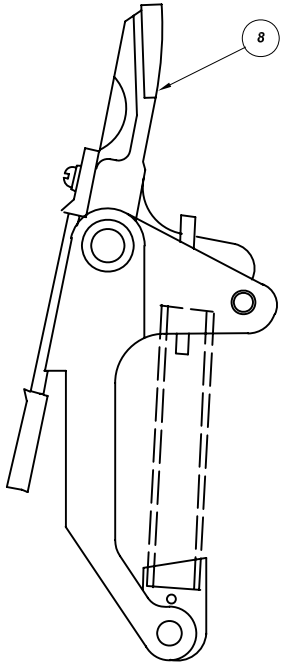

TYPE '7F & 11F' SWITCH CONTACTS

GROUPS VARY DEPENDING UPON DIVERTER RATING, MAY HAVE SINGLE OR DOUBLE FLEX AND ALSO VARIOUS SPACERS. CONTACT POWERSERVE UK LTD FOR CORRECT REPLACEMENT PARTS

INDIVIDUAL ITEMS ALSO AVAILABLE SUCH AS SPRINGS, FLEXES ETC.

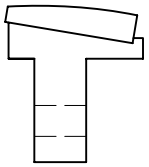

GROUP B

TYPE '7F & 11F' SWITCH CONTACTS

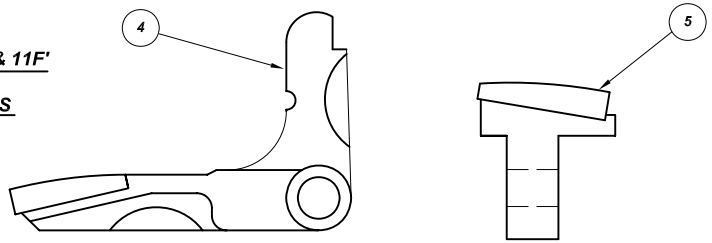

NOTE:- USE THIS GROUP TO REPLACE JUST FIXED AND MOVING CONTACTS RATHER THAN WHOLE ASSEMBLIES. SUPPLIED COMPLETE WITH GROUND PINS AND TO LATEST SPECIFICATION (ie RIVETED, NOT WITH SPLIT PINS) AND TORQUE INSTRUCTIONS FOR FLEX CONNECTIONS

DET 4 MOVING CONTACT = P300051/A

DET 5 FIXED CONTACT = P300050/A

DET 6 PIN = P300088/4 NOT SHOWN

DET 7 HARDENED STEEL SCREW = P300902/4 NOT SHOWN

GROUP C & E

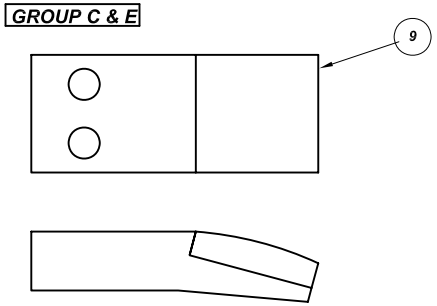

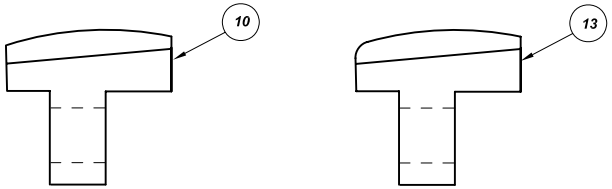

TYPE 'O' SWITCH CONTACTS

DET 9: MOVING CONTACT = P300054/A

DET 10: FIXED CONTACT = P300096/A (MAIN)

DET 13; FIXED CONTACT P300096/B (RESISTOR)

No	Revision notes	Date/Sig	No	Revision notes	Date/Sig	No	Revision notes	Date/Sig

Powerserve UK Limited

SERVING ELECTRICAL UTILITIES

TO CONTACT US
TEL: +44(0)1279-418630
FAX: +44(0)1279-210097
WEB: www.powerserveuk.com
EMAIL: info@powerserveuk.com

Scale NTS | Drawn ACS | Checked AJT | Approved AJT | Date 10/03/10

DIV/SEL SWITCH CONTACTS FOR ATL/FULLER TYPE HS & AMD TAPCHANGERS

RE No P300909 REV 0

Sheet No

TO CONTACT US - TEL: +44(0)1279-418630 WEB: www.powerserveuk.com EMAIL: info@powerserveuk.com

All information contained in this document is confidential and the copyright reserved

Used on dwg MANUAL

P300914

Quantity D	Quantity C	Quantity B	Quantity A	No	Description	Detail No		OEM Part No
			1	1	CONDENSER BUSHING 450 A	P300039/1		
		1		2	CONDENSER BUSHING 800 A	P300039/2		
		1	1	3	BUSHING GASKET	P300039/3	CORK	
	1			4	CONDENSER BUSHING 460 A	P300039/4		
1				5	CONDENSER BUSHING 700 A	P300039/5		
1	1			6	BUSHING GASKET	P300039/6	CORK	
				7	BLANKING PLATE FOR DETS 1 & 2	SEE P902014	MAY BE REQUIRED IF BUSHINGS ARE REMOVED AND UNIT ON FIXED TAP	
				8	BLANKING PLATE FOR DETS 4 & 5	SEE P902014		

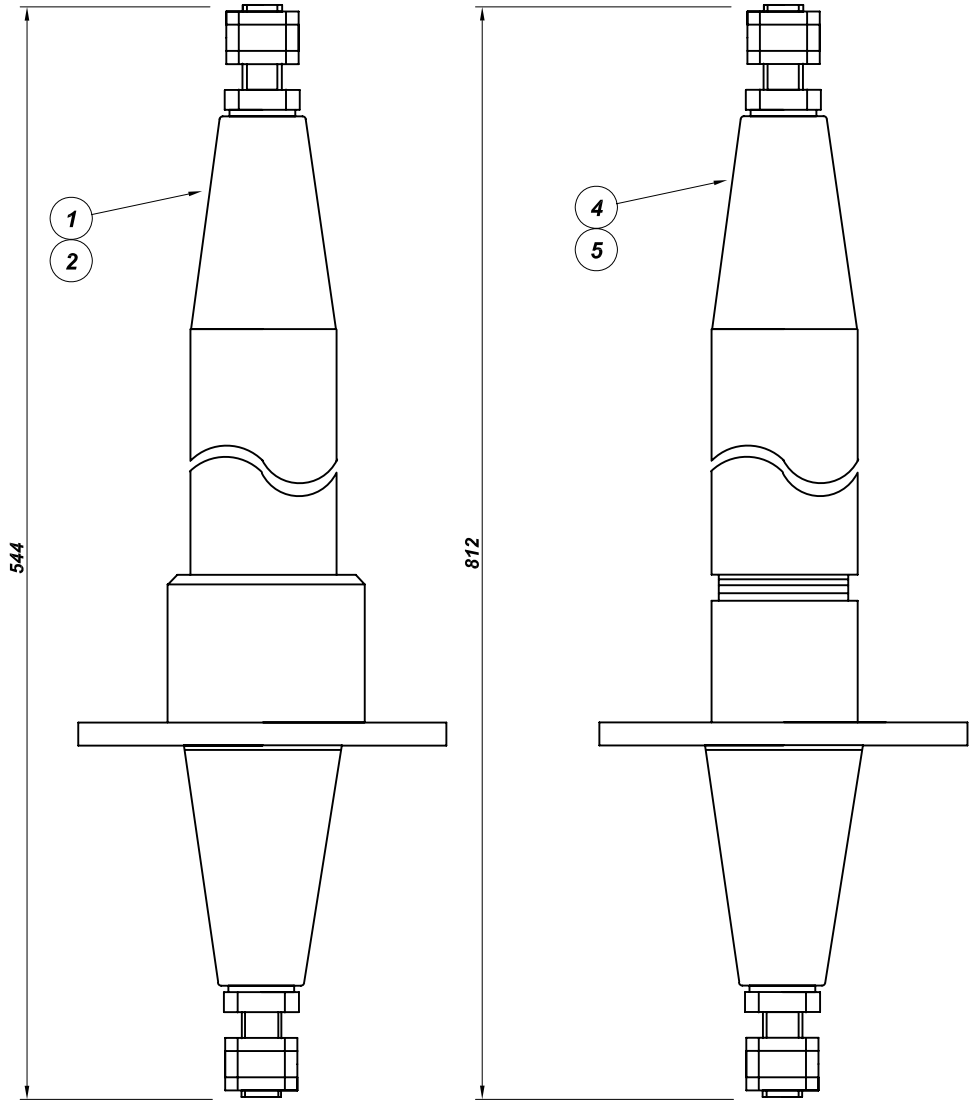

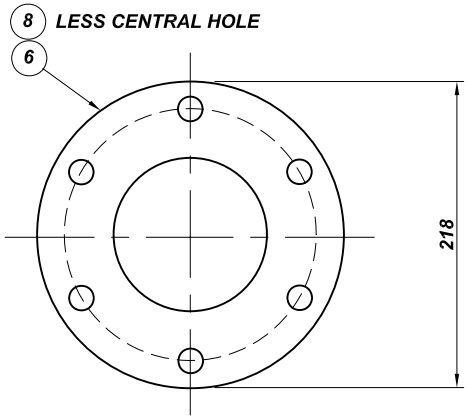

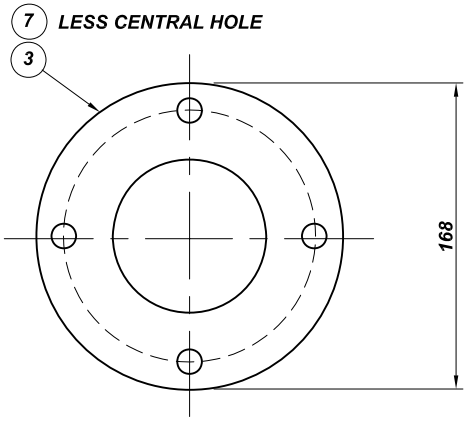

NOTE:-
(a) Oil leakage & electrical tests to be in accordance with BEA specification T2 Schedule F
(b) Bushing to be pressure tested to 19lbs/sq"
(c) Top and bottom of bushing stem to be fitted with elastic seal
(d) For refurbishment of bushing, suffix group number with 'R'

Det 1 - Suitable for 33kv working voltage, 200kv Impulse test, max 450A current. Centre stem from CU tube d/D 21/25 with brazed ends
Det 2 - Suitable for 33kv working voltage, 200kv Impulse test, max 800A current. Centre stem from CU rod d=25

Det 4 - Suitable for 66kv working voltage, 350kv Impulse test, max 460A current. Centre stem from CU tube d/D 21/25 with brazed ends
Det 5 - Suitable for 66kv working voltage, 350kv Impulse test, max 700A current. Centre stem from CU rod d=25

No	Revision notes	Date/Sig	No	Revision notes	Date/Sig	No	Revision notes	Date/Sig

Powerserve UK Limited
SERVING ELECTRICAL UTILITIES

TO CONTACT US
TEL: +44(0)1279-418630
FAX: +44(0)1279-210097
WEB: www.powerserveuk.com
EMAIL: info@powerserveuk.com

Scale NTS | Drawn ACS | Checked AJT | Approved AJT | Date 08/03/10

CONDENSER BUSHINGS FOR FULLER/ATL TYPE AMD, ASD HD AND HS TAPCHANGERS

RE No P300914 REV 0

Sheet No

TO CONTACT US - TEL: +44(0)1279-418630 WEB: www.powerserveuk.com EMAIL: info@powerserveuk.com

All information contained in this document is confidential and the copyright reserved

Used on dwg MANUAL

P300915

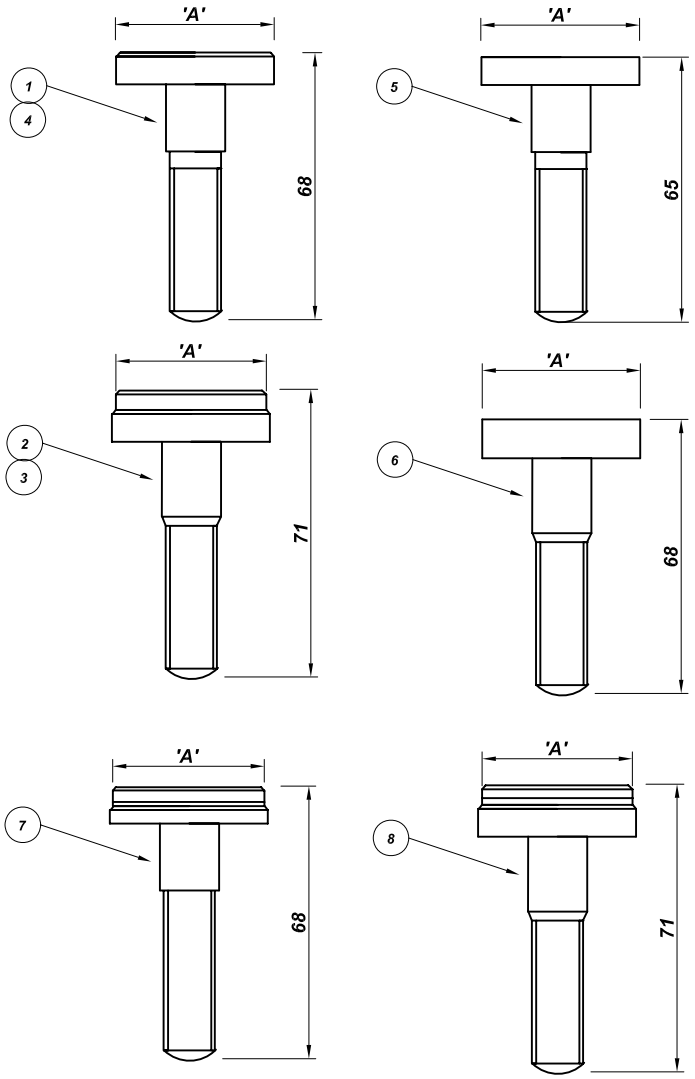

HEAD DIM	F	E	Quantity D	Quantity C	Quantity B	Quantity A	No	Description	Detail No	Numbers	OEM Part No
'A' = 33				12			1	MOVING CONTACT	P300085/1	35-37-076	112672-1
'A' = 33				12			2	FIXED CONTACT	P300085/2	35-37-074	112672-2
'A' = 39.5		12					3	FIXED CONTACT	P300085/3	35-37-075	112672-3
'A' = 40		12					4	MOVING CONTACT	P300085/4	35-37-077	112672-4
'A' = 33	12						5	CONTACT	P300085/5		
'A' = 34.5	12						6	CONTACT	P300085/6		
'A' = 31.8			12				7	TIPPED CONTACT-FIXED	P300084/A	35-37-082	571196-B
'A' = 31.8			12				8	TIPPED CONTACT-MOVING	P300084/B	35-37-088	571196-A
'A' = 24.5						12	9	TIPPED CONTACT-MOVING	P300086/A	35-37-085	571196-C
'A' = 25						12	10	TIPPED CONTACT-FIXED	P300086/B	35-37-080	571196-D
'A' = 25					12		11	CONTACT	P300099/1		013375-1
'A' = 25					12		12	CONTACT	P300099/2		013375-2
'A' = 25							13	CONTACT	P300099/3		
'A' = 22							14	MOVING CONTACT	P300456/1		
'A' = 22							15	FIXED CONTACT	P300456/2		
'A' = 25							16	TIPPED CONTACT-FIXED	P300086/C		
'A' = 22							17	TIPPED MOVING CONTACT	P300456/A		
'A' = 22							18	TIPPED FIXED CONTACT	P300456/B		

FOR CONTACT HOLDERS SEE DRAWING P300928

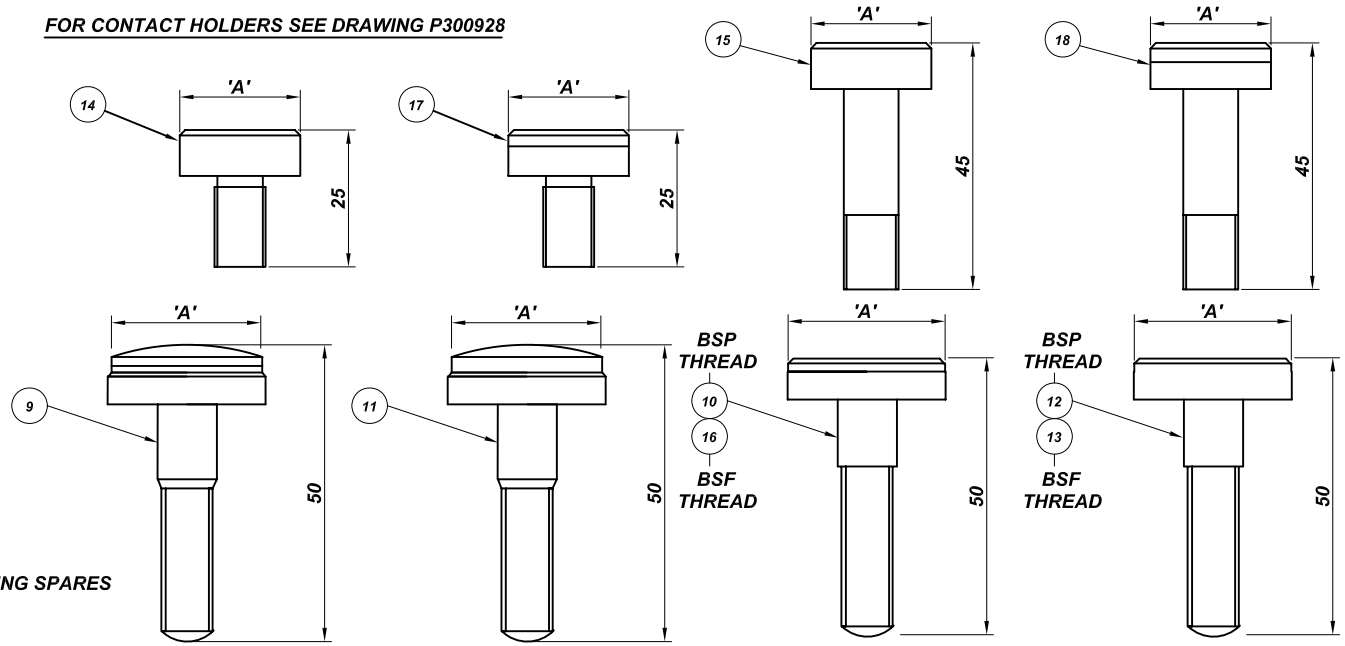

IMPORTANT NOTES:
1) PLEASE STATE TAPCHANGER TYPE, SERIAL NUMBER AND SITE WHEN ORDERING SPARES
2) QUANTITIES ARE PER TAPCHANGER
3) DIMENSIONS ON P300915 ARE FOR GUIDANCE ONLY

No	Revision notes	Date/Sig	No	Revision notes	Date/Sig	No	Revision notes	Date/Sig

Powerserve UK Limited
SERVING ELECTRICAL UTILITIES

TO CONTACT US
TEL: +44(0)1279-418630
FAX: +44(0)1279-210097
WEB: www.powerserveuk.com
EMAIL: info@powerserveuk.com

Scale NTS | Drawn ACS | Checked AJT | Approved AJT | Date 08/03/10

FIXED & MOVING DIVERTER CONTACTS FOR ATL FULLER TYPE H,EH & HD T/C'S

RE No | Sheet No | P300915 | REV 0

Form No 3-7.3.6-A3 Rev B

TO CONTACT US - TEL: +44(0)1279-418630 WEB: www.powerserveuk.com EMAIL: info@powerserveuk.com

All information contained in this document is confidential and the copyright reserved

Used on dwg MANUAL

P300917

KEY
Group A - Full Fixed and Moving Contact Kit with Replacement Contact Rollers
Group B - Single Moving Contact Roller refurbishment Kit
Group C - Full Moving Contact Roller refurbishment Kit
Group D - Full Fixed Contact Kit
Group E - Full Split Ring Kit complete with hardware
Group F - Main Moving Contact Fixings Kit

		Quantity								
F	E	D	C	B	A	No	Description	Detail No		OEM Part No
		51			51	1	FIXED CONTACT BODY	P300056/A		
						2	MOVING CONTACT ASSY	P300240/C		
						3	MOVING CONTACT ASSY	P300240/B		
						4	MOVING CONTACT ASSY	P300240/A		
			12	1	12	5	MOVING CONTACT ROLLER	P300028/5		
			12	1	12	6	SPACER	P300339/8		
			12	1	12	7	RIVET	SR 5/32" L=3/4"		
			24	2	24	8	WAVY WASHER	P300024/2		
	36					9	SCREW FOR SPLIT RING ASSY	ID6S 2BA-5/8"		
						10	MAIN MOVING CONTACT HOLDER	P300259/A		
	3					11	SPLIT RING ASSEMBLY	P300258/A		
						12	CONTACT SPRING (6 OFF)	P300440/2		
3						13	PIN	P300440/1		
6						14	WASHER	ISTW-2BA		
6						15	SPLIT PIN	ISCP-1/16"-5/8"		
					6	16	MAIN MOVING CONTACT	P300257/1		
						17	FIXED CONTACT HOLDER	P300441/1		
						18	MOVING CONTACT ARM	P300240/F		
						19	MOVING CONTACT ARM	P300240/E		
						20	MOVING CONTACT ARM	P300240/D		
						21	INSPECTION COVER GASKET	P300684/1	NOT SHOWN	

MOVING CONTACT ROLLER REFURBISHMENT KIT

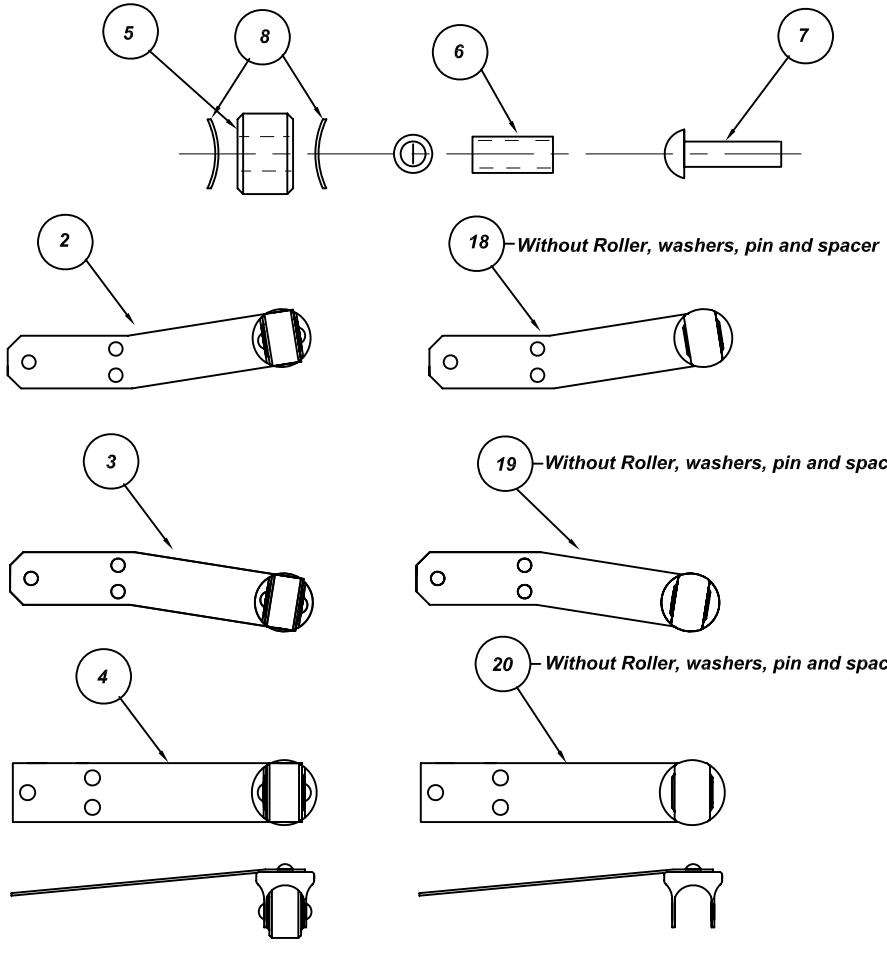

No	Revision notes	Date/Sig	No	Revision notes	Date/Sig	No	Revision notes	Date/Sig

Powerserve UK Limited
SERVING ELECTRICAL UTILITIES

TO CONTACT US
TEL: +44(0)1279-418630
FAX: +44(0)1279-210097
WEB: www.powerserveuk.com
EMAIL: info@powerserveuk.com

Scale NTS | Drawn ACS | Checked AJT | Approved AJT | Date 08/03/10

REPLACEMENT PARTS FOR FULLER/ATL TYPE FBA TAPCHANGER

RE No P300917 REV 0

Sheet No

TO CONTACT US - TEL: +44(0)1279-418630 WEB: www.powerserveuk.com EMAIL: info@powerserveuk.com

All information contained in this document is confidential and the copyright reserved

Used on dwg MANUAL

P300920

Quantity D	Quantity C	Quantity B	Quantity A	No	Description	Detail No		OEM Part No
				1	EH & DD SIGHT GLASS	P300020/1		
				2-10	OIL GAUGE GLASS	P300034		
				11-19	OIL GAUGE GASKET	P300034		
				20-21	SIGHT GLASS	P300041		216794
				22	METROSIL ASSEMBLY	P300044		
				23	NON LINEAR RESISTOR BLOCKS	P300030		

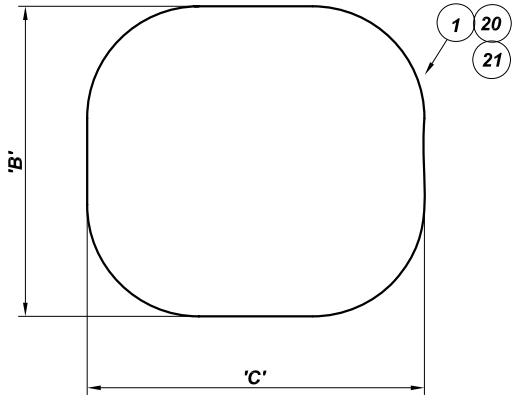

TABLE 1		
ITEM	'B'	'C'
1	114.5	154
20	162	262
21	162	197

NOTE: APPROXIMATE DIMENSIONS GIVEN FOR INDICATION ONLY. PLEASE STATE UNIT TYPE AND SERIAL NUMBER WITH YOUR ENQUIRY

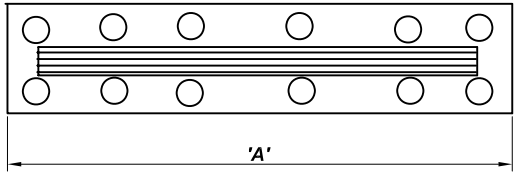

DETAILS 2 TO 10. PRISMATIC OIL GAUGE WINDOW

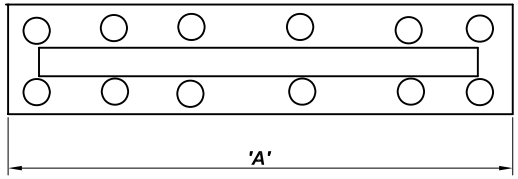

DETAILS 11 TO 20. PRISMATIC OIL GAUGE GASKET

TABLE 2		
ITEM		'A'
2	11	190.5
3	12	241.3
4	13	292.1
5	14	342.9
6	15	393.8
7	16	444.6
8	17	495.3
9	18	88.9
10	19	139.7

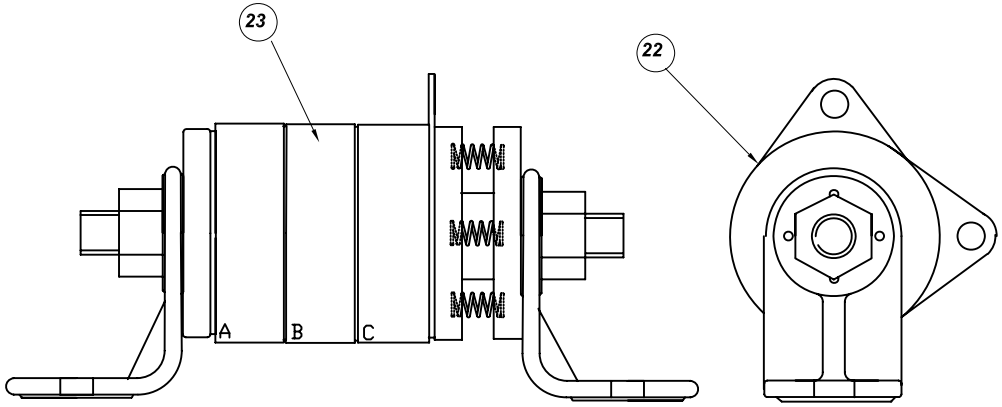

No	Revision notes	Date/Sig	No	Revision notes	Date/Sig	No	Revision notes	Date/Sig

Powerserve UK Limited
SERVING ELECTRICAL UTILITIES

TO CONTACT US
TEL: +44(0)1279-418630
FAX: +44(0)1279-210097
WEB: www.powerserveuk.com
EMAIL: info@powerserveuk.com

VARIOUS PARTS FOR USE ON ATL/FULLER TAPCHANGERS

Scale NTS | Drawn ACS | Checked AJT | Approved AJT | Date 08/03/10

RE No | Sheet No | P300920 | REV 0

TO CONTACT US - TEL: +44(0)1279-418630 WEB: www.powerserveuk.com EMAIL: info@powerserveuk.com

All information contained in this document is confidential and the copyright reserved

Used on dwg MANUAL

P300922

DET	DIM 'L'
1	250
2	350
3	330
4	183
5	160

Quantity D	Quantity C	Quantity B	Quantity A	No	Description	Detail No		OEM Part No
				1	STRESS SHIELD	P300227/1		
				2	STRESS SHIELD	P300227/3		
				3	STRESS SHIELD	P300227/4		
				4	STRESS SHIELD	P300227/5		
				5	STRESS SHIELD	P300227/6		
				6	STRESS SHIELD WITH SLOT	P300250/1		
				7	STRESS SHIELD WITH SLOT	P300250/2		
				8	STRESS SHIELD WITH SLOT	P300250/3		
				9	STRESS SHIELD WITH SLOT	P300250/4		

0UTSIDE DIAMETER OF ALL STRESS SHIELDS IS 63.5mm APPROX

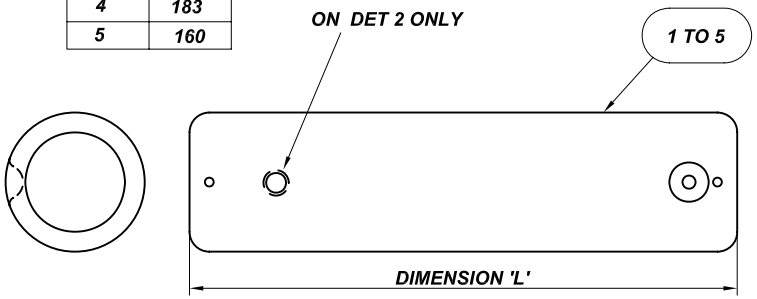

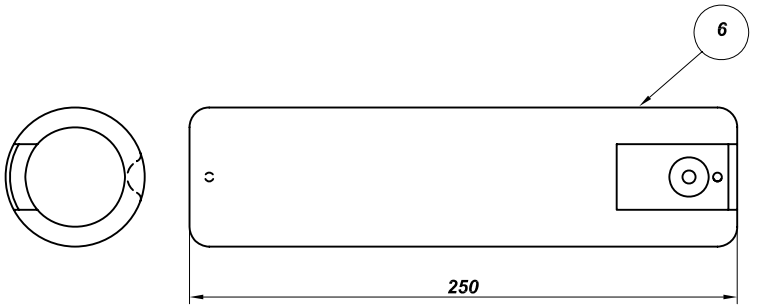

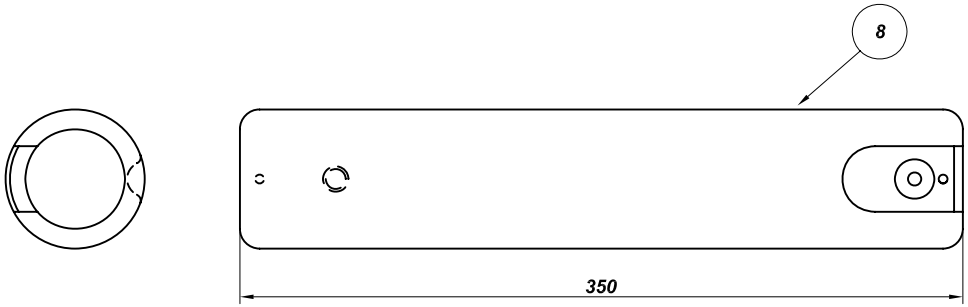

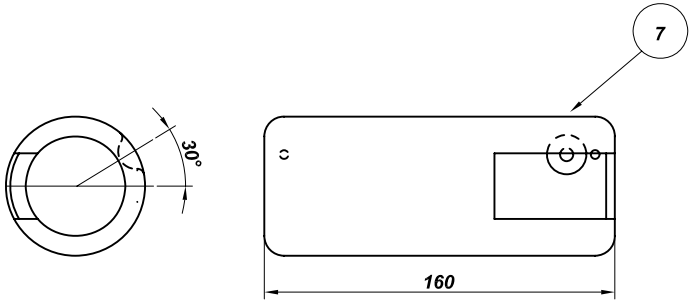

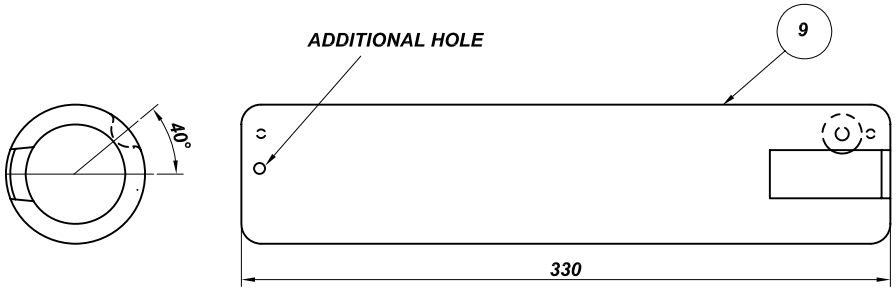

No	Revision notes	Date/Sig	No	Revision notes	Date/Sig	No	Revision notes	Date/Sig

Powerserve UK Limited
SERVING ELECTRICAL UTILITIES

TO CONTACT US
TEL: +44(0)1279-418630
FAX: +44(0)1279-210097
WEB: www.powerserveuk.com
EMAIL: info@powerserveuk.com

STRESS SHIELDS FOR FULLER TYPE HS TAPCHANGERS

Scale NTS | Drawn ACS | Checked AJT | Approved AJT | Date 08/03/10

RE No | Sheet No | P300922 | REV 0

TO CONTACT US - TEL: +44(0)1279-418630 WEB: www.powerserveuk.com EMAIL: info@powerserveuk.com

All information contained in this document is confidential and the copyright reserved

Used on dwg MANUAL

P300923

Quantity D	Quantity C	Quantity B	Quantity A	No	Description	Detail No		OEM Part No
				1	CONTACTS STUD ASSEMBLY	P300325/A		L=350 D=3/4" 11TPI BSW
				2	CONTACTS STUD ASSEMBLY	P300325/B		L=350 D=5/8" BSF
				3	CONTACTS STUD ASSEMBLY	P300325/C		L=350 D=1" 11TPI BSW
				4	CONTACTS STUD ASSEMBLY	P300325/D		L=350 D=3/4" 11TPI BSW
				5	CONTACTS STUD ASSEMBLY	P300325/E		L=350 D=3/4" 11TPI BSW
				6	CONTACTS STUD ASSEMBLY	P300325/F		L=350 D=M24
				7	CONTACTS STUD ASSEMBLY	P300325/G		L=350 D=M20
				8	CONTACTS STUD ASSEMBLY	P300325/H		L=385 D=1" 11TPI BSW
				9	CONTACTS STUD ASSEMBLY	P300325/J		L=385 D=M24
				10	CONTACTS STUD ASSEMBLY	P300325/K		L=385 D=3/4" 11TPI BSW

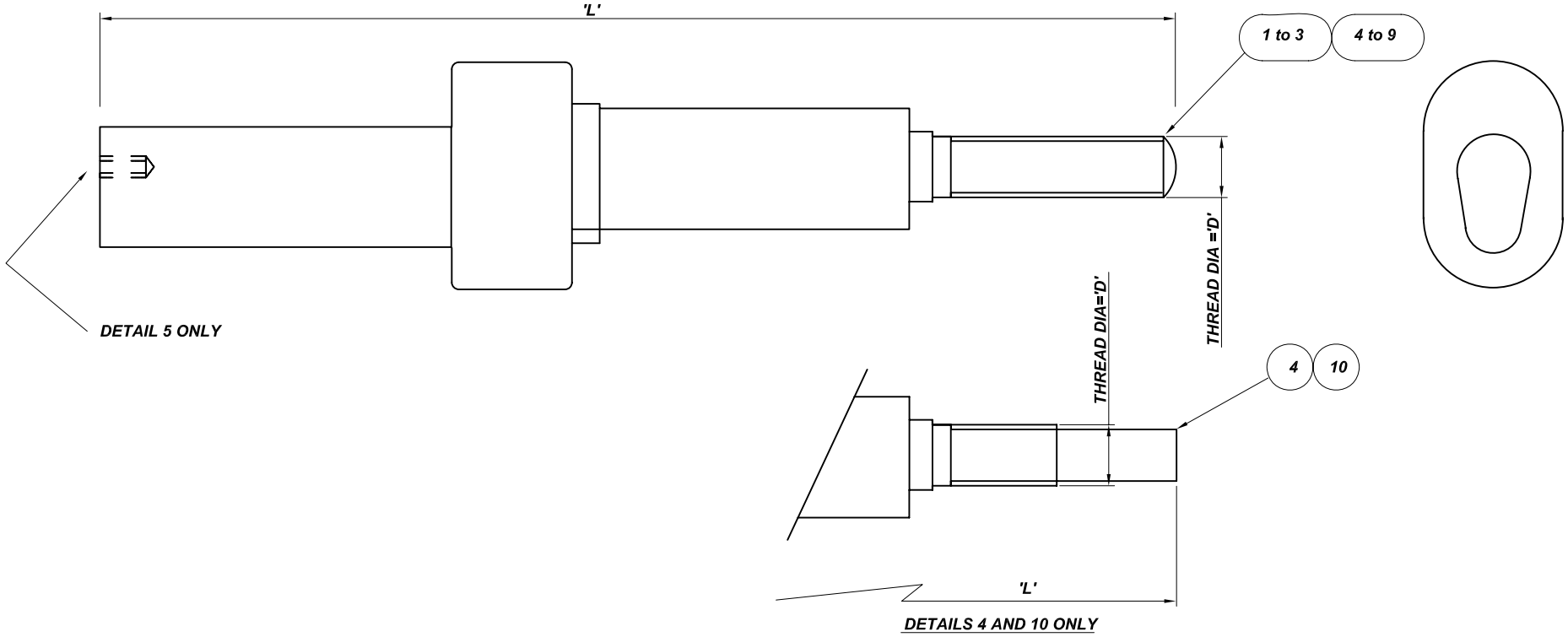

No	Revision notes	Date/Sig	No	Revision notes	Date/Sig	No	Revision notes	Date/Sig

Powerserve UK Limited
SERVING ELECTRICAL UTILITIES

TO CONTACT US
TEL: +44(0)1279-418630
FAX: +44(0)1279-210097
WEB: www.powerserveuk.com
EMAIL: info@powerserveuk.com

CAST RESIN CONTACT STUDS FOR ATL TYPE HCO OFF CIRCUIT SELECTOR

Scale NTS | Drawn ACS | Checked AJT | Approved AJT | Date 08/03/10

RE No | Sheet No | P300923 | REV 0

Form No 3-7.3.6-A3 Rev B

TO CONTACT US - TEL: +44(0)1279-418630 WEB: www.powerserveuk.com EMAIL: info@powerserveuk.com

All information contained in this document is confidential and the copyright reserved

Used on dwg MANUAL

P300924

Quantity D	Quantity C	Quantity B	Quantity A	No	Description	Detail No		REPLACES OEM Part No
				1	TRANSITION RESISTOR ASSY	P300397 Various	SEE NOTE	
				2	MAGNETIC COUNTER	P300464/1		562926-A

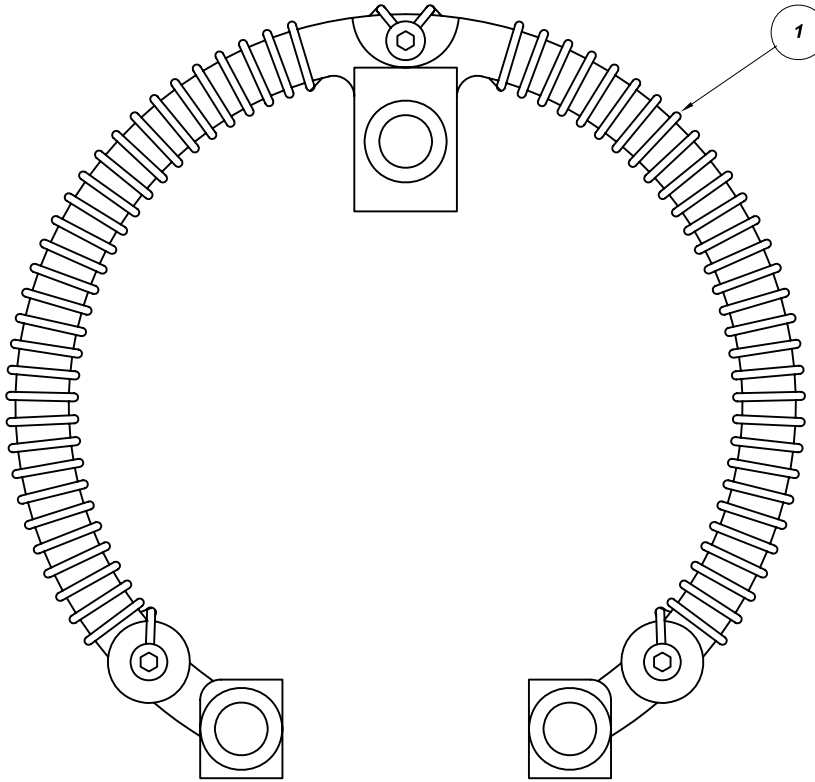

1 — **IMPORTANT**
WHEN SPECIFYING THIS ASSEMBLY PLEASE QUOTE THE SERIAL No OF UNIT AND TRANSFORMER DETAILS TO ENSURE THE CORRECT RESISTOR SIZE IS REPLACED

RESISTOR ASSEMBLIES CAN HAVE STRAIGHT OR COIL WOUND WIRE AROUND THE MOULDED FORMER

No	Revision notes	Date/Sig	No	Revision notes	Date/Sig	No	Revision notes	Date/Sig

Powerserve UK Limited
SERVING ELECTRICAL UTILITIES

TO CONTACT US
TEL: +44(0)1279-418630
FAX: +44(0)1279-210097
WEB: www.powerserveuk.com
EMAIL: info@powerserveuk.com

Scale NTS | Drawn ACS | Checked AJT | Approved AJT | Date 08/03/10

FULLER/ATL
TRANSITION RESISTOR ASSY'S
FOR TYPE AT TAPCHANGERS

RE No P300924 REV 0
Sheet No

TO CONTACT US - TEL: +44(0)1279-418630 WEB: www.powerserveuk.com EMAIL: info@powerserveuk.com

All information contained in this document is confidential and the copyright reserved

Used on dwg MANUAL

P300925

Quantity D	Quantity C	Quantity B	Quantity A	No	Description	Detail No		OEM Part No
				1	REFURBISHED CENTRIFUGAL SW	P300594/AR		

H & EH MECHANISMS

POWERSERVE UK LTD CAN SUPPLY AND FIT (INCLUDING SET UP) PARTS AND ASSEMBLIES TO ALL H & EH MECHANISMS INCLUDING:-

A) WORM & WHEEL ASSEMBLIES
B) BEVEL GEAR ASSEMBLIES
C) FLYWHEEL & CENTRIFUGAL SWITCHES
D) P.I AND OTHER FACEPLATE SWITCHES
E) CLUTCH MECHANISMS AND CONTACTORS
F) MOTORS
G) DRIVE SHAFTS & VERNIER COUPLINGS
H) LIMIT SWITCHES AND ISOLATION SWITCHES
J) REWIRING OF MECHANISMS
K) ANGLE DRIVES FROM THE MECHANISM TO SELECTOR SWITCHES
L) VARIOUS SEALS AND GASKETS

PLEASE PROVIDE THE SERIAL NUMBER OF THE TAPCHANGER WHEN REQUESTING ANY OF THE ABOVE.

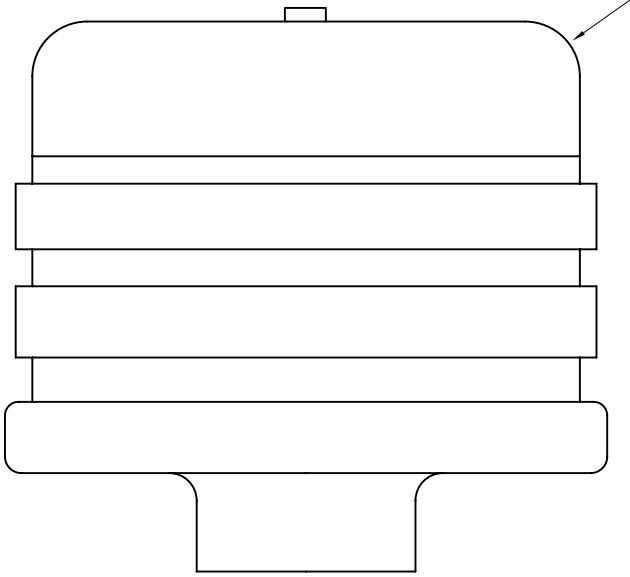

1 — REFURBISHED SWITCHES AND REPLACEMENTS WILL ONLY BE PROVIDED IF ORIGINAL SWITCHES ARE RETURNED TO POWERSERVE UK LTD

No	Revision notes	Date/Sig	No	Revision notes	Date/Sig	No	Revision notes	Date/Sig

Powerserve UK Limited
SERVING ELECTRICAL UTILITIES

TO CONTACT US
TEL: +44(0)1279-418630
FAX: +44(0)1279-210097
WEB: www.powerserveuk.com
EMAIL: info@powerserveuk.com

Scale NTS | Drawn ACS | Checked AJT | Approved AJT | Date 09/03/10

REFURBISHMENT OF FULLER/ATL CENTRIFUGAL SWITCHES FOR TYPE H & EH MECHANISMS

RE No P300925 REV 0

Sheet No

TO CONTACT US - TEL: +44(0)1279-418630 WEB: www.powerserveuk.com EMAIL: info@powerserveuk.com

All information contained in this document is confidential and the copyright reserved

Used on dwg MANUAL

P300926

Quantity D	Quantity C	Quantity B	Quantity A	No	Description	Detail No		OEM Part No
				1	LEAD SCREW AND SPECIAL NUT	SEE NOTES		

NOTES

1) THREADS CAN BE RIGHT HAND OR LEFT HAND
2) THE PITCH OF THE SCREW THREAD VARIES DEPENDANT ON THE SIZE OF SELECTOR
3) THE LEAD SCREW SHOWN BELOW IS ONLY TYPICAL WITH VARIOUS THREAD AND OVERALL LENGTHS
4) ALL PATTERN LEAD SCREWS SUPPLIED COME COMPLETE WITH ITS OWN SPECIAL NUT AND MUST BE KEPT TOGETHER AT ALL TIMES
5) WHEN REQUESTING THE PARTS BELOW PLEASE STATE THE SERIAL NUMBER AND TYPE DESIGNATION OF THE UNIT ON THE RATING PLATE.

IMPORTANT

ALL LEAD SCREWS AND SPECIAL NUT SHOULD BE REMOVED AND FITTED BY POWERSERVE UK LTD

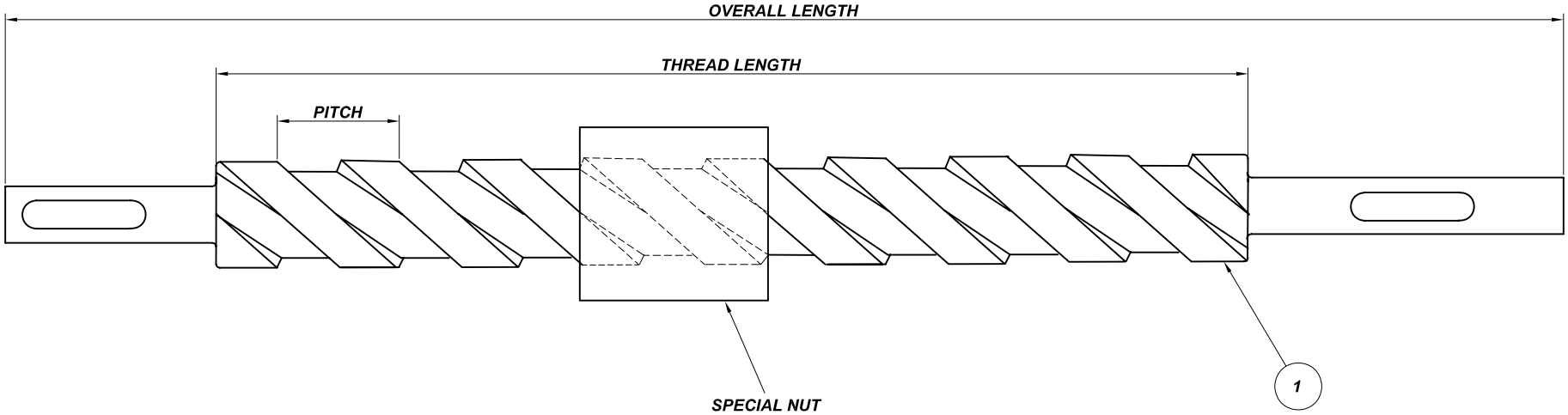

No	Revision notes	Date/Sig	No	Revision notes	Date/Sig	No	Revision notes	Date/Sig

Powerserve UK Limited
SERVING ELECTRICAL UTILITIES

TO CONTACT US
TEL: +44(0)1279-418630
FAX: +44(0)1279-210097
WEB: www.powerserveuk.com
EMAIL: info@powerserveuk.com

LEAD SCREWS FOR FULLER/ATL TYPE H & EH SESLECTOR SWITCHES

Scale NTS | Drawn ACS | Checked AJT | Approved AJT | Date 09/03/10

RE No | Sheet No | P300926 | REV 0

TO CONTACT US - TEL: +44(0)1279-418630 WEB: www.powerserveuk.com EMAIL: info@powerserveuk.com

All information contained in this document is confidential and the copyright reserved

Used on dwg MANUAL

P300927

Quantity D	Quantity C	Quantity B	Quantity A	No	Description	Detail No		OEM Part No
			1	1	GASKET - SELECTOR COVER (HS)	P300457/1		
			1	2	GASKET - SEL INSP COVER (HS)	P300457/2		
			1	3	GASKET - DRIVE POCKET (HS)	P300457/3		
				4	GASKET - SELECTOR COVER (EH)	P300500/1		
				5	GASKET - SELECTOR COVER (H)	P300728/1		

GROUP A IS AN HS TAPCHANGER GASKET KIT

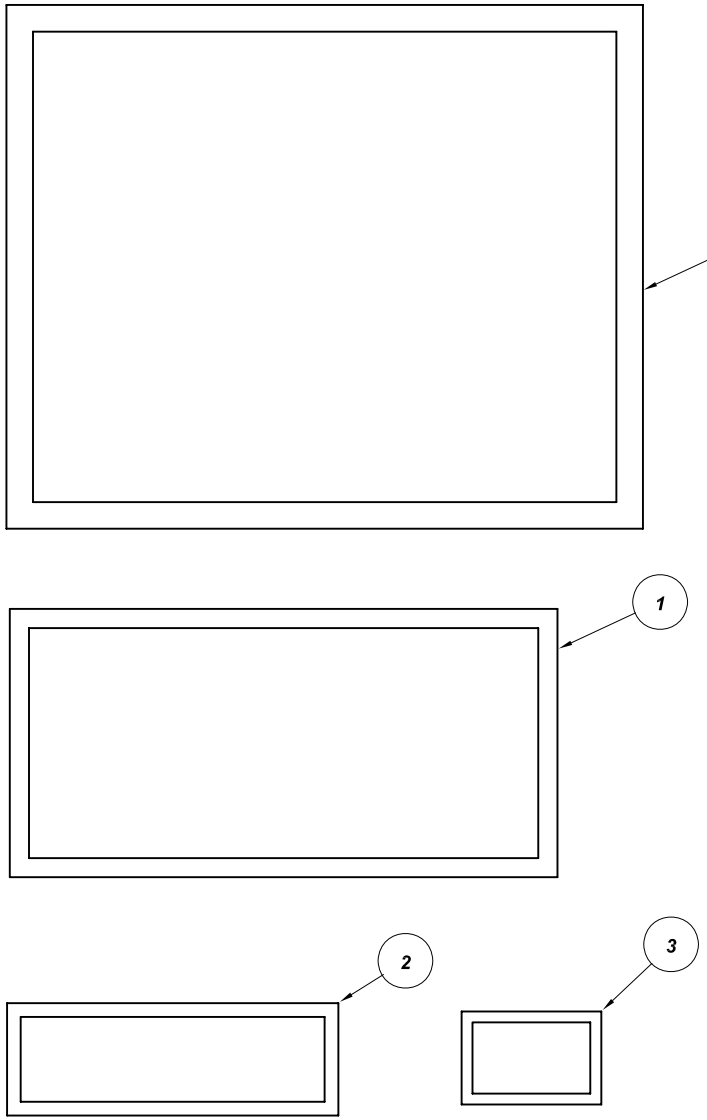

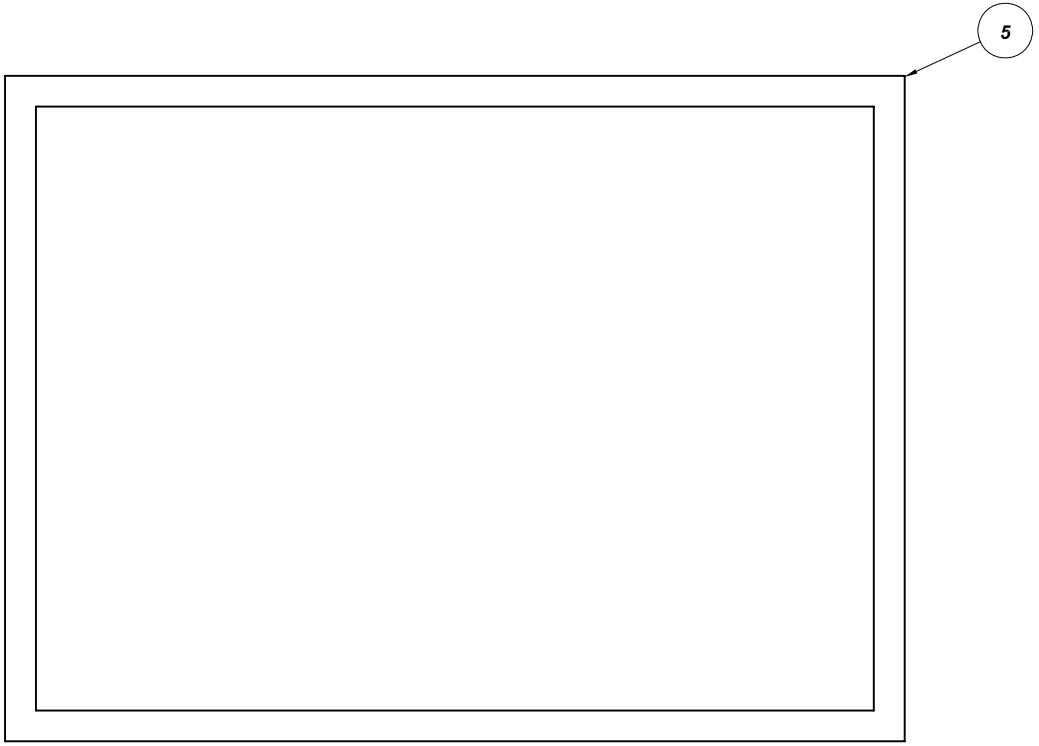

REPLACEMENT GASKETS ARE UNDRILLED
BECAUSE OF STUD VARIATIONS ON TANKS

No	Revision notes	Date/Sig	No	Revision notes	Date/Sig	No	Revision notes	Date/Sig

Powerserve UK Limited
SERVING ELECTRICAL UTILITIES

TO CONTACT US
TEL: +44(0)1279-418630
FAX: +44(0)1279-210097
WEB: www.powerserveuk.com
EMAIL: info@powerserveuk.com

GASKET KITS
FOR FULLER/ATL TYPE
EH, H & HS TAPCHANGERS

Scale NTS | Drawn ACS | Checked AJT | Approved AJT | Date 09/03/10

RE No | Sheet No | P300927 | REV 0

TO CONTACT US - TEL: +44(0)1279-418630 WEB: www.powerserveuk.com EMAIL: info@powerserveuk.com

All information contained in this document is confidential and the copyright reserved

Used on dwg MANUAL

P300928

Quantity D	Quantity C	Quantity B	Quantity A	No	Description	Detail No		OEM Part No
				1	FIXED CONTACT HOLDER (H/HD)	P300209/1		
				2	MOVING CONTACT HOLDER (H/HD)	P300732/1		
				3	FIXED CONTACT HOLDER (H/HD)	P300726/1		
				4	MOVING CONTACT HOLDER (EH)	P300463/B		

FOR FIXED AND MOVING CONTACTS SEE DRAWING P300915

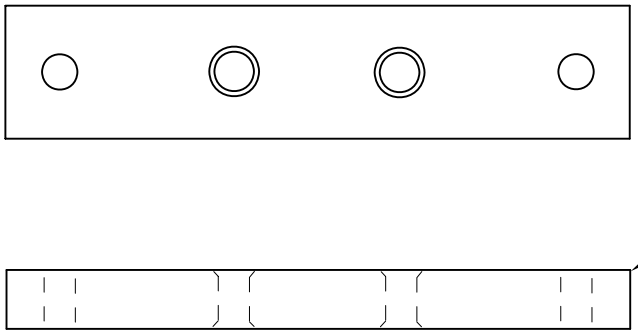

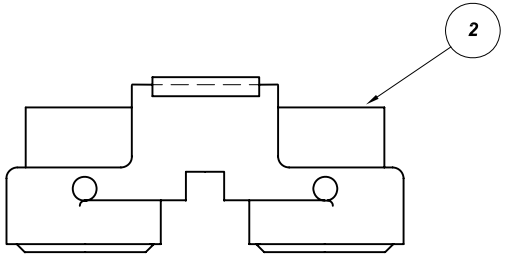

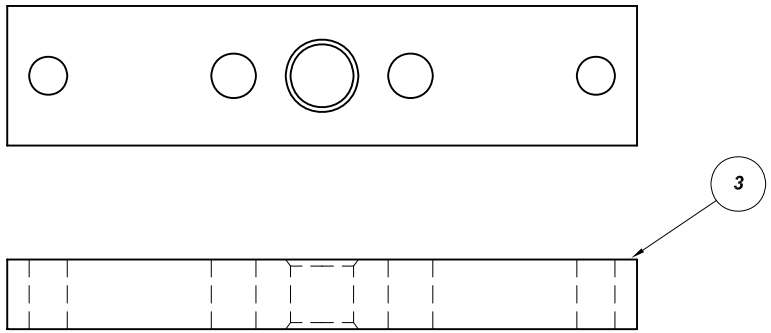

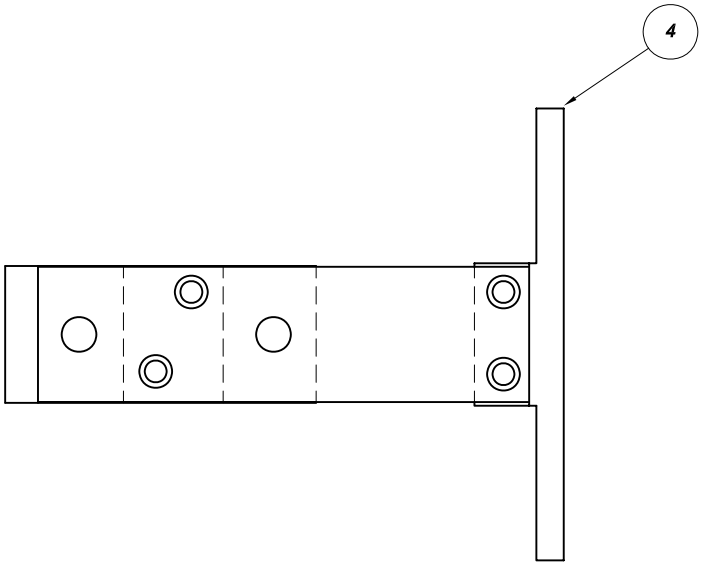

No	Revision notes	Date/Sig	No	Revision notes	Date/Sig	No	Revision notes	Date/Sig

Powerserve UK Limited
SERVING ELECTRICAL UTILITIES

TO CONTACT US
TEL: +44(0)1279-418630
FAX: +44(0)1279-210097
WEB: www.powerserveuk.com
EMAIL: info@powerserveuk.com

PATTERN DIVERTER SWITCH CONTACT HOLDERS FOR FULLER TYPE H, EH & HD T/C'S

Scale NTS | Drawn ACS | Checked AJT | Approved AJT | Date 09/03/10

RE No | Sheet No | P300928 | REV 0

TO CONTACT US - TEL: +44(0)1279-418630 WEB: www.powerserveuk.com EMAIL: info@powerserveuk.com

All information contained in this document is confidential and the copyright reserved

Used on dwg MANUAL

P300929

Quantity D	Quantity C	Quantity B	Quantity A	No	Description	Detail No		OEM Part No
				1	DIRECTIONAL SEQUENCE SWITCH	SEE NOTES		

NOTES
1) NUMBER OF CONTACT WAFERS CAN VARY (3 SHOWN)
2) THE CONTACT CONFIGURATIONS CAN VARY
3) THE AMOUNT AND LOCATION OF SPRING BATTERIES CAN VARY (1 EACH END SHOWN)
4) WHEN REQUESTING THESE PARTS PLEASE STATE THE SERIAL NUMBER OF THE TAPCHANGER
5) WHEN SPECIFYING THESE SWITCHES USE IN CONJUNCTION WITH SELECTION DRAWING P300774 (AVAILABLE ON REQUEST)

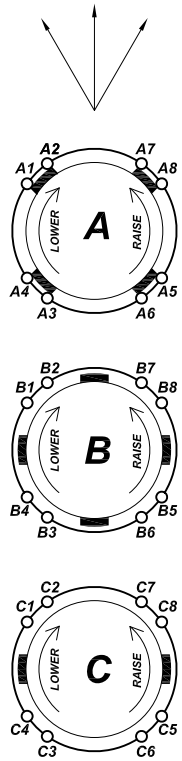

TYPICAL CONTACT CONFIGURATION

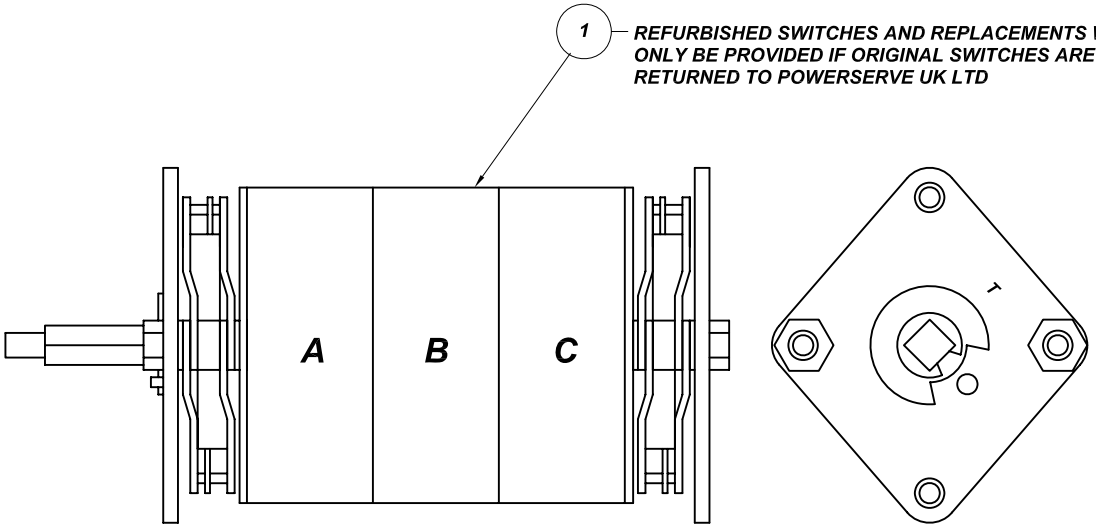

1 — REFURBISHED SWITCHES AND REPLACEMENTS WILL ONLY BE PROVIDED IF ORIGINAL SWITCHES ARE RETURNED TO POWERSERVE UK LTD

TYPICAL SWITCH

CONTACTS NOT SHOWN FOR CLARITY

No	Revision notes	Date/Sig	No	Revision notes	Date/Sig	No	Revision notes	Date/Sig

Powerserve UK Limited
SERVING ELECTRICAL UTILITIES

TO CONTACT US
TEL: +44(0)1279-418630
FAX: +44(0)1279-210097
WEB: www.powerserveuk.com
EMAIL: info@powerserveuk.com

Scale NTS | Drawn ACS | Checked AJT | Approved AJT | Date 09/03/10

REFURBISHMENT OF FULLER/ATL DIRECTIONAL SEQ SWITCHES FOR ALL MECHANISMS

RE No P300929 REV 0

Sheet No

TO CONTACT US - TEL: +44(0)1279-418630 WEB: www.powerserveuk.com EMAIL: info@powerserveuk.com

All information contained in this document is confidential and the copyright reserved

Used on dwg MANUAL

P300930

Quantity D	Quantity C	Quantity B	Quantity A	No	Description	Detail No		OEM Part No
				1	MICROSWITCH ASSEMBLY	P300747/A		
				2	COMPRESSION SETTING TOOL	P300746/1		
				3	P.I DISC EXTRACTION TOOL	P300746/2		
				4	FITTING INSTRUCTIONS	P300758		

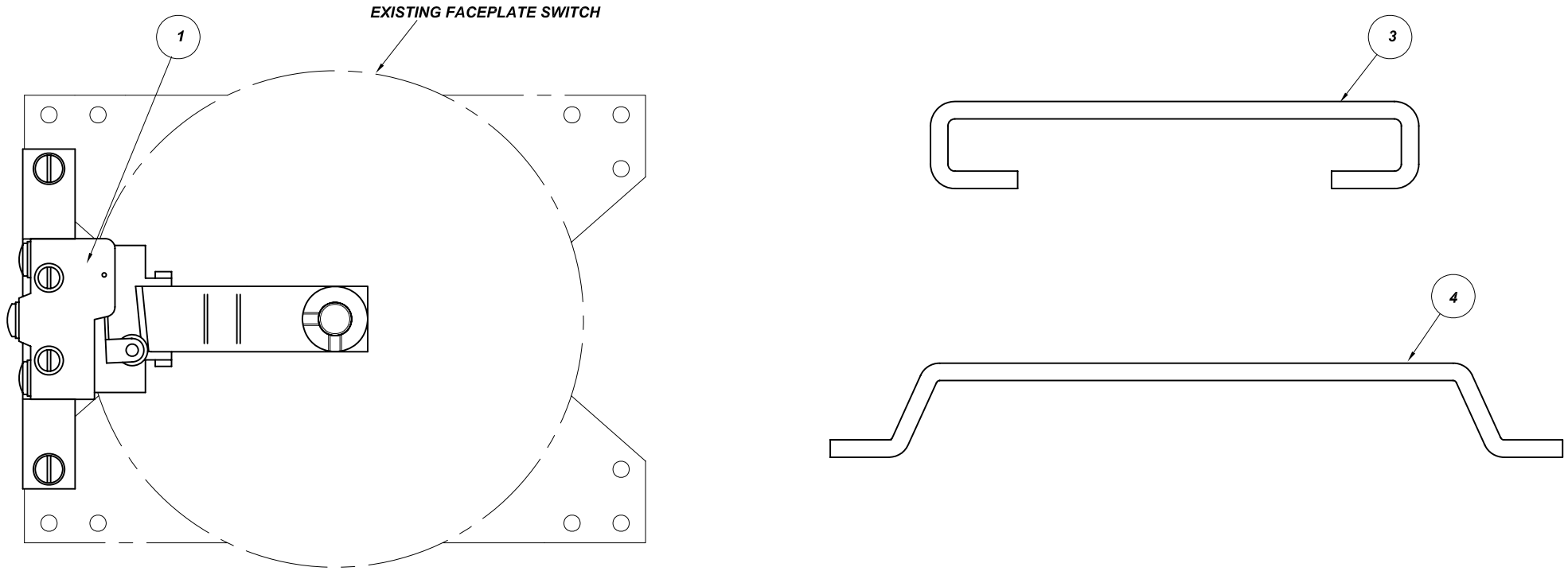

No	Revision notes	Date/Sig	No	Revision notes	Date/Sig	No	Revision notes	Date/Sig

Powerserve UK Limited
SERVING ELECTRICAL UTILITIES

TO CONTACT US
TEL: +44(0)1279-418630
FAX: +44(0)1279-210097
WEB: www.powerserveuk.com
EMAIL: info@powerserveuk.com

MICROSWITCH RETROFIT KIT FOR

RE No P300930 REV 0

Scale NTS | Drawn ACS | Checked AJT | Approved ATL TYPE AT/BE/TAP CHANGER | Date 28/04/04 | Sheet No

Form No 3-7.3.6-A3 Rev B

TO CONTACT US - TEL: +44(0)1279-418630 WEB: www.powerserveuk.com EMAIL: info@powerserveuk.com

All information contained in this document is confidential and the copyright reserved

Used on dwg MANUAL

P300931

Quantity D	Quantity C	Quantity B	Quantity A	No	Description	Detail No		OEM Part No
			1	1	GASKET-TOP COVER	P300751/1		
			1	2	GASKET-FRONT INSP COVER	P300751/2		
			1	3	GASKET-TOP DRIVE POCKET	P300751/3		
			1	4	GASKET-BOTTOM DRIVE POCKET	P300751/4		
			1	5	GASKET-SEL INSP COVER	P300751/5		
			1	6	GASKET-TOP GEARBOX COVER	P300751/6		

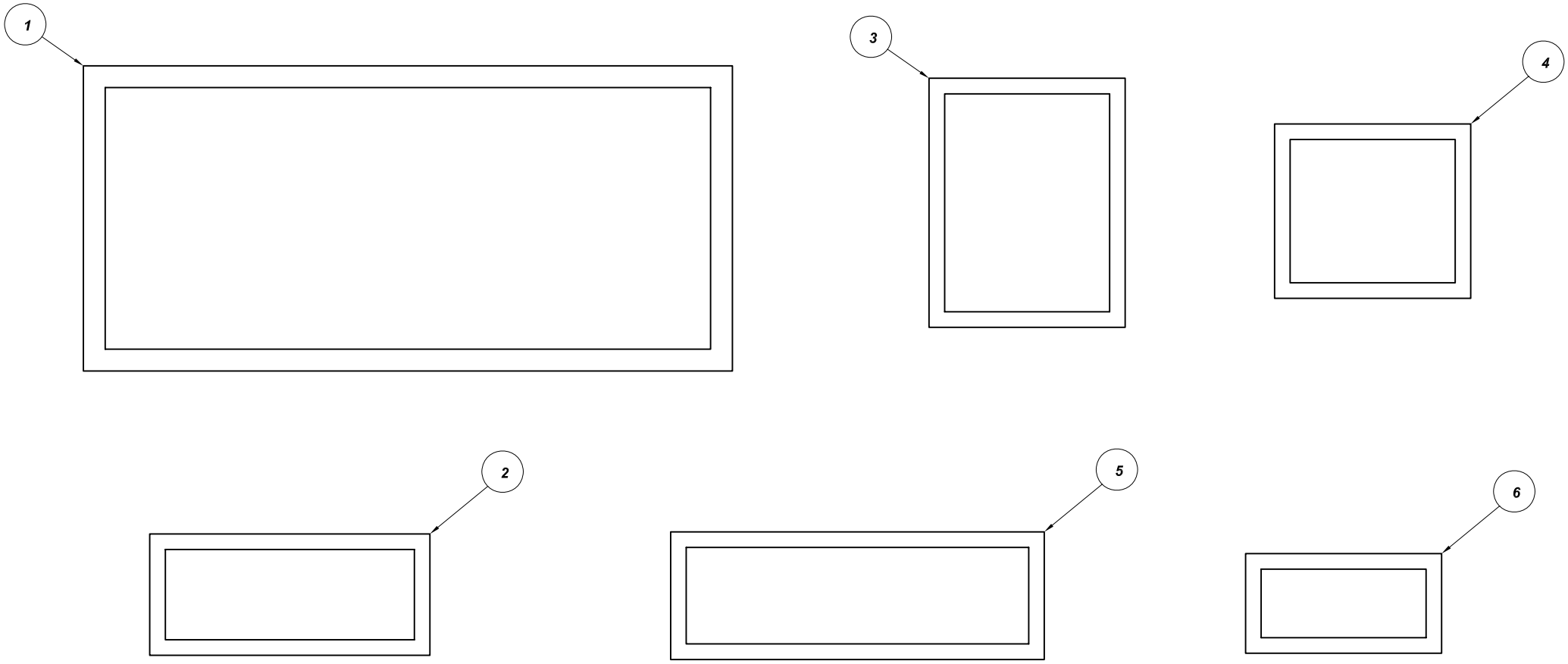

No	Revision notes	Date/Sig	No	Revision notes	Date/Sig	No	Revision notes	Date/Sig

Powerserve UK Limited
SERVING ELECTRICAL UTILITIES

TO CONTACT US
TEL: +44(0)1279-418630
FAX: +44(0)1279-210097
WEB: www.powerserveuk.com
EMAIL: info@powerserveuk.com

Scale NTS | Drawn ACS | Checked AJT | Approved AJT | Date 09/03/10

GASKET KIT FOR A FULLER TYPE HS 66KV TAPCHANGER

RE No P300931 REV 0

Sheet No

TO CONTACT US - TEL: +44(0)1279-418630 WEB: www.powerserveuk.com EMAIL: info@powerserveuk.com

All information contained in this document is confidential and the copyright reserved

Used on dwg MANUAL

P301900

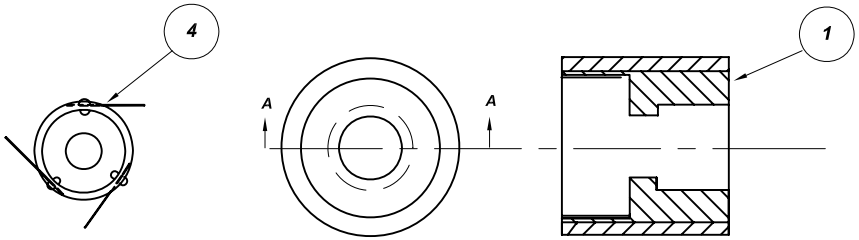

Quantity D	Quantity C	Quantity B	Quantity A	No	Description	Detail No	Nat Com No	OEM Part No
		3	3	1	RATCHET ROLLER	P301012/1	35-37-416	
	6	6	6	2	TRANS. FINGER CONTACT (LONG)	P301013/A	35-37-419	
	6	6	6	3	AUX. FINGER CONTACT (SHORT)	P301014/A	35-37-418	
		AS REQD	3	4	RATCHET ASSEMBLY	P301012/B		
				5	MAIN CONTACT	P301020/A	35-37-417	
				6	OIL LEVEL GAUGE GASKET (FC4)	P301060/1		
				7	GASKET (FC4)	P301131/1		
				8	DIVERTER GASKET (FC4)	P301092/1		

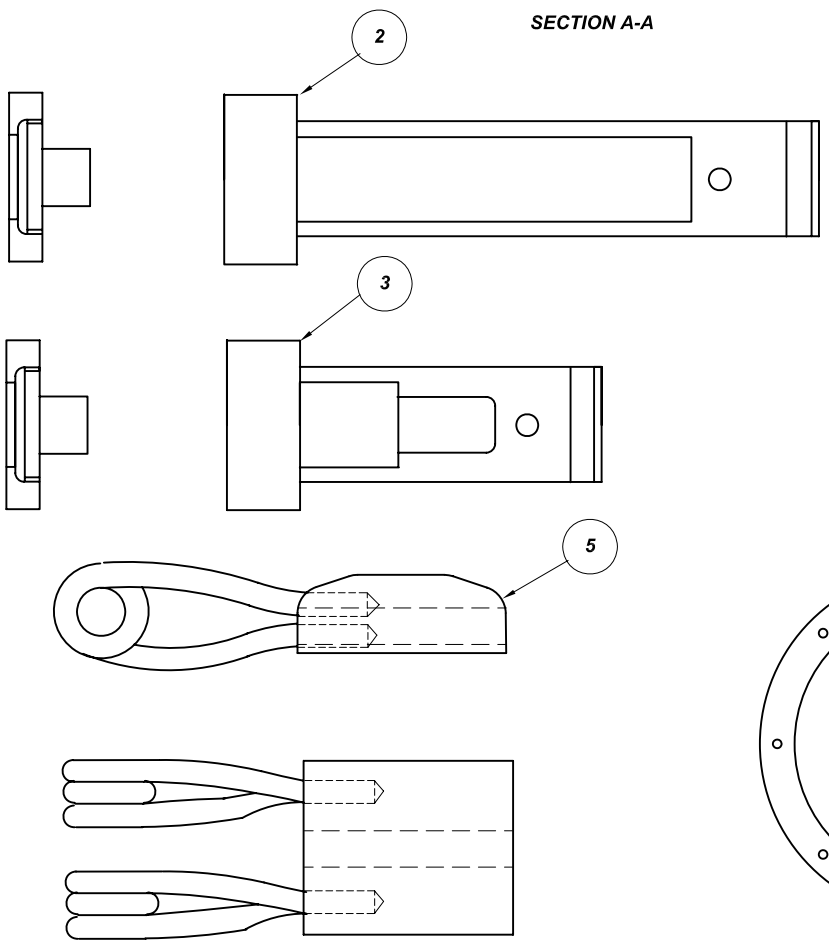

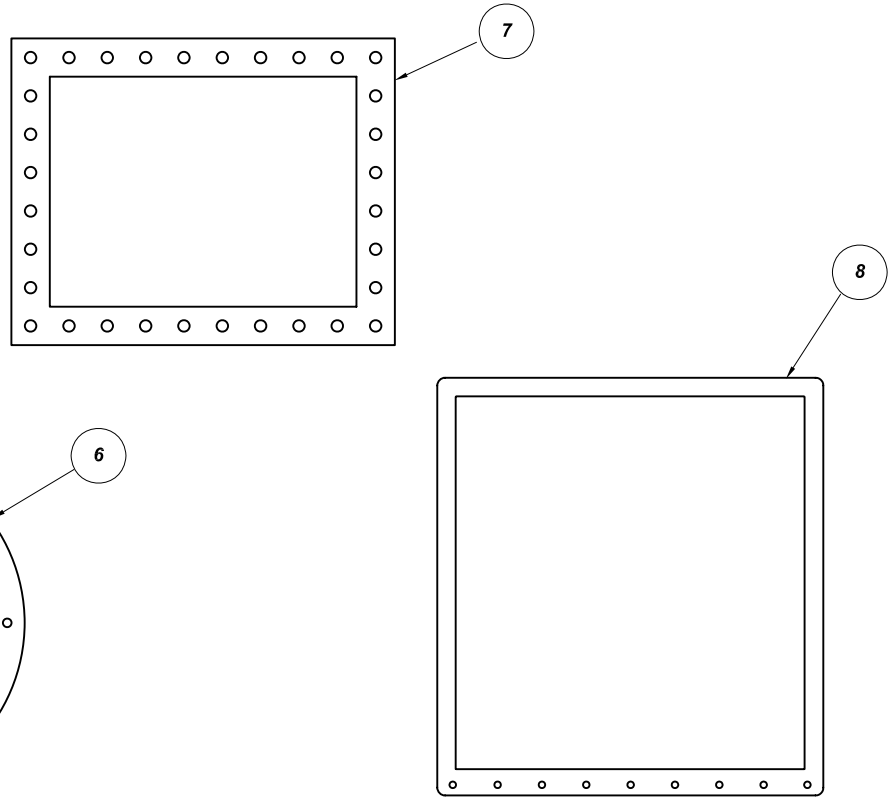

No	Revision notes	Date/Sig	No	Revision notes	Date/Sig	No	Revision notes	Date/Sig

Powerserve UK Limited
SERVING ELECTRICAL UTILITIES

TO CONTACT US
TEL: +44(0)1279-418630
FAX: +44(0)1279-210097
WEB: www.powerserveuk.com
EMAIL: info@powerserveuk.com

REPLACEMENT PARTS SUITABLE FOR FERRANTI TYPE FC4, DC3 & DC5 TAPCHANGERS

Scale NTS | Drawn ACS | Checked AJT | Approved AJT | Date 10/03/10

RE No: P301900 | REV: 0

Sheet No

Form No 3-7.3.6-A3 Rev B

TO CONTACT US - TEL: +44(0)1279-418630 WEB: www.powerserveuk.com EMAIL: info@powerserveuk.com

All information contained in this document is confidential and the copyright reserved

Used on dwg MANUAL

P301903

Quantity D	Quantity C	Quantity B	Quantity A	No	Description	Detail No	Nat Com No	OEM Part No
			12	1	MOVING CONTACT (W=31.8)	P301026/4	35-37-374	
			12	2	FIXED CONTACT (W=31.8)	P301025/1	35-37-375	
		12		3	MOVING CONTACT TIPPED (W=31.8)	P301026/B		
		12		4	FIXED CONTACT TIPPED (W=31.8)	P301025/A		
	12			5	MOVING CONTACT (W=38.1)	P301026/1	35-37-371	
	12			6	FIXED CONTACT (W=38.1)	P301025/3	35-37-376	
12				7	MOVING CONTACT TIPPED (W=38.1)	P301026/A	35-37-379	
12				8	FIXED CONTACT TIPPED (W=38.1)	P301025/B	35-37-377	

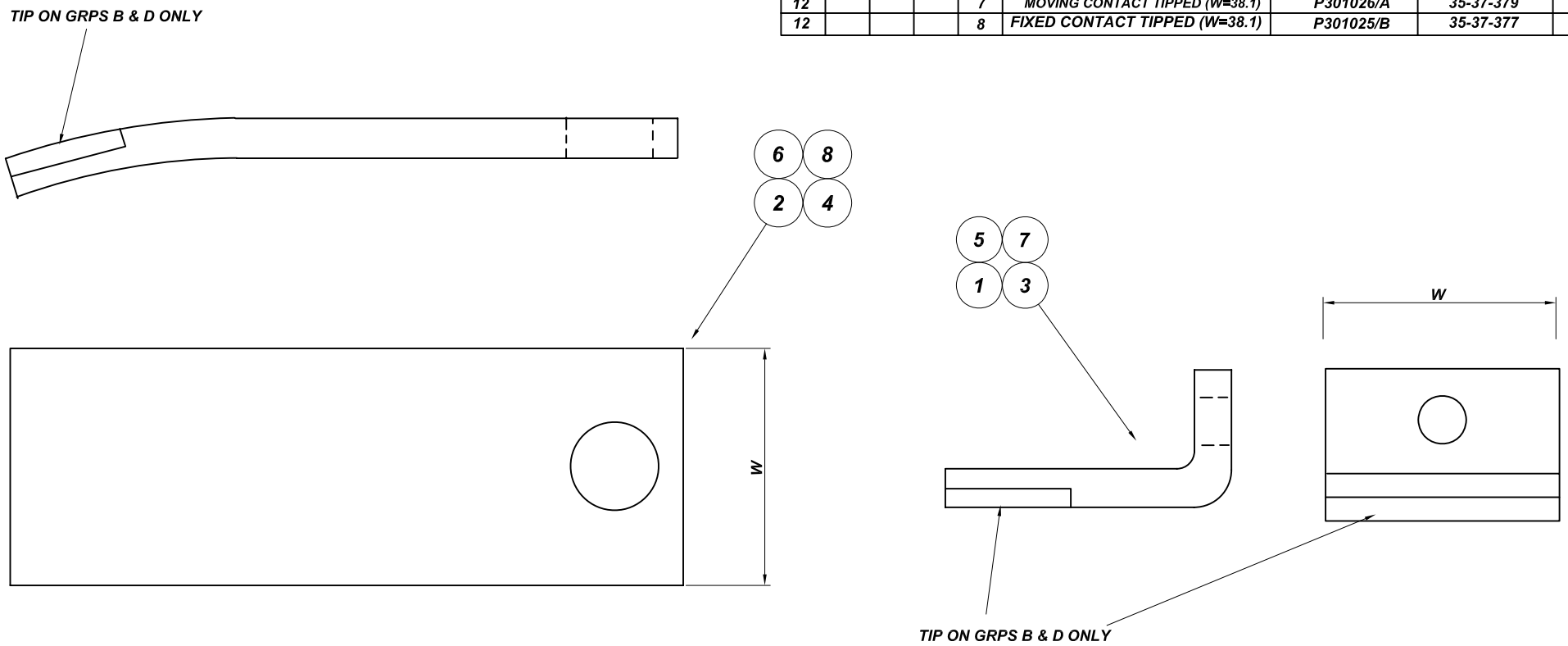

No	Revision notes	Date/Sig	No	Revision notes	Date/Sig	No	Revision notes	Date/Sig

Powerserve UK Limited
SERVING ELECTRICAL UTILITIES

TO CONTACT US
TEL: +44(0)1279-418630
FAX: +44(0)1279-210097
WEB: www.powerserveuk.com
EMAIL: info@powerserveuk.com

REPLACEMENT PARTS FOR FERRANTI ROTARY TAPCHANGER

Scale NTS | Drawn ACS | Checked AJT | Approved AJT | Date 09/03/10

RE No: P301903 | REV 0

Sheet No

TO CONTACT US - TEL: +44(0)1279-418630 WEB: www.powerserveuk.com EMAIL: info@powerserveuk.com

All information contained in this document is confidential and the copyright reserved

Used on dwg MANUAL

P301904

NOTES:

DS2/ES3
- GROUP A FOR FULL ASSEMBLIES
- DETAILS 1, 2 & 3 FOR INDIVIDUAL ASSEMBLIES
- DETAILS 4 & 5 FOR INDIVIDUAL ROLLER CONTACTS ONLY
- DETAIL 11 FOR INDIVIDUAL CONTACT STUD ASSEMBLIES

DS5
- GROUP C FOR FULL ASSEMBLIES
- DETAILS 6, 7 & 8 FOR INDIVIDUAL ASSEMBLIES
- DETAILS 9 & 10 FOR INDIVIDUAL ROLLER CONTACTS ONLY
- DETAIL 12 FOR INDIVIDUAL CONTACT STUD ASSEMBLIES

Quantity D	Quantity C	Quantity B	Quantity A	No	Description	Detail No		OEM Part No
			51	1	FIXED CONTACT ASSEMBLY	P301005/A		
			3	2	MAIN ARCING CONTACT ASSEMBLY	P301006/A		
			3	3	TRANSITIONAL ARCING CONTACT ASSY	P301006/B		
		AS REQD		4	FIXED CONTACT ROLLER ONLY	P300028/9		
		AS REQD		5	MOVING CONTACT ROLLER ONLY	P300028/10		
	51			6	FIXED CONTACT ASSEMBLY	P301005/C		
	3			7	MAIN ARCING CONTACT ASSEMBLY	P301006/C		
	3			8	TRANSITIONAL ARCING CONTACT ASSY	P301006/D		
AS REQD				9	FIXED CONTACT ROLLER ONLY	P301052/1		
AS REQD				10	MOVING CONTACT ROLLER ONLY	P301052/2		
				11	CONTACT STUD ASSEMBLY	P301056/A		
				12	CONTACT STUD ASSEMBLY	P301056/B		
				13	CONTACT STUD	P301628/1		

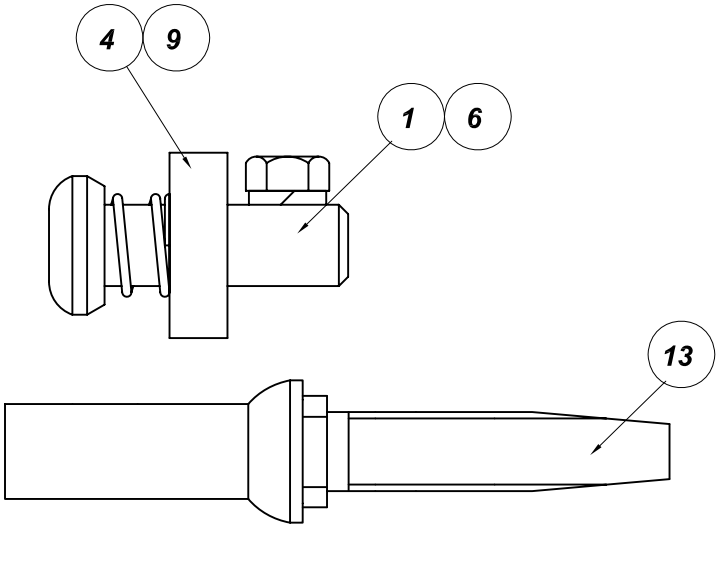

DC3 STUD

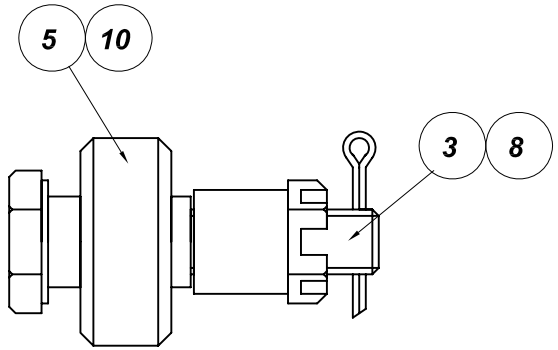

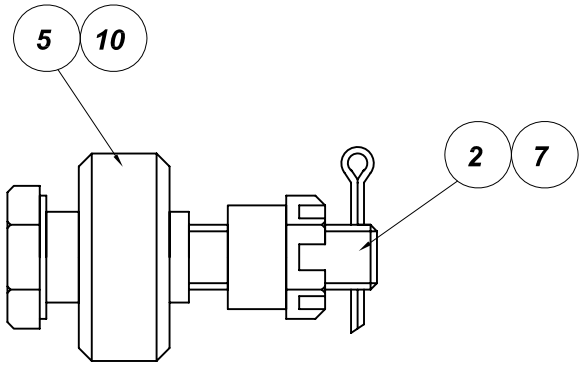

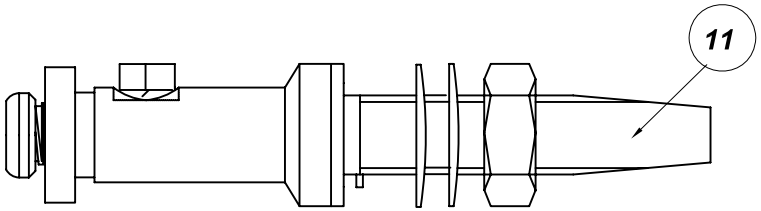

DS2/ES3 STUD ASSEMBLY

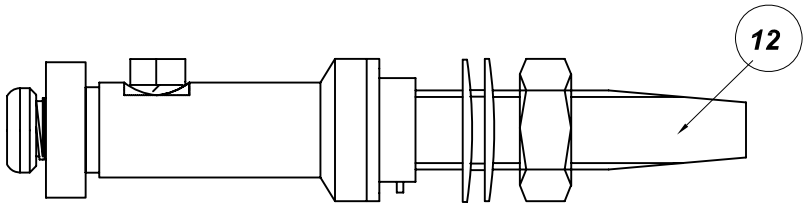

DS5 STUD ASSEMBLY

No	Revision notes	Date/Sig	No	Revision notes	Date/Sig	No	Revision notes	Date/Sig

Powerserve UK Limited
SERVING ELECTRICAL UTILITIES

TO CONTACT US
TEL: +44(0)1279-418630
FAX: +44(0)1279-210097
WEB: www.powerserveuk.com
EMAIL: info@powerserveuk.com

REPLACEMENT PARTS FOR FERRANTI TYPE DS2, ES3 & DS5 TAPCHANGERS

Scale NTS | Drawn ACS | Checked AJT | Approved AJT | Date 10/03/10

RE No P301904 | REV 0

Sheet No

TO CONTACT US - TEL: +44(0)1279-418630 WEB: www.powerserveuk.com EMAIL: info@powerserveuk.com

All information contained in this document is confidential and the copyright reserved

Used on dwg MANUAL

P301905

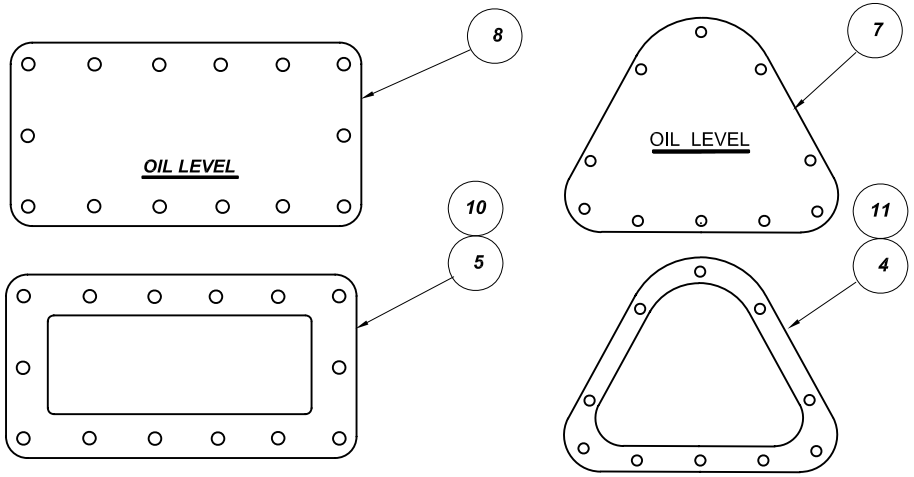

Quantity D	Quantity C	Quantity B	Quantity A	No	Description	Detail No		OEM Part No
			2	1	SIDE COVER GASKET	P301031/1		
		1		2	SELECTOR COVER GASKET	P301001/1		
		1		3	GEARBOX GASKET	P301002/1		
3		3		4	GEARBOX SIGHT GLASS GASKET	P301004/1		
	3	3		5	SELECTOR SIGHT GLASS GASKET	P301003/1		
				6	SELECTOR AIR VENT GASKET	P300029/1	Not shown	
1				7	GEARBOX SIGHT GLASS	P301010/1		
	1			8	SELECTOR SIGHT GLASS	P301011/A		
				9	AIR VENT	P301029/A	Not shown	
	1			10	SELECTOR SIGHT GLASS CLAMP	P301003/2		
1				11	GEARBOX SIGHT GLASS CLAMP	P301004/2		
				12	PRINTED CIRCUIT DISC (SMALL)	P301033/A		
				13	PRINTED CIRCUIT DISC (LARGE)	P301041/A	Not shown	
				14	MOTOR DS2	P301905/14	Not shown	
				15	CAPACITOR (12uF) FOR MOTOR	P301057/1		
				16	TAPCHANGER COUNTER	P301058/1		
				17	GEARBOX GASKET	P301028/1		

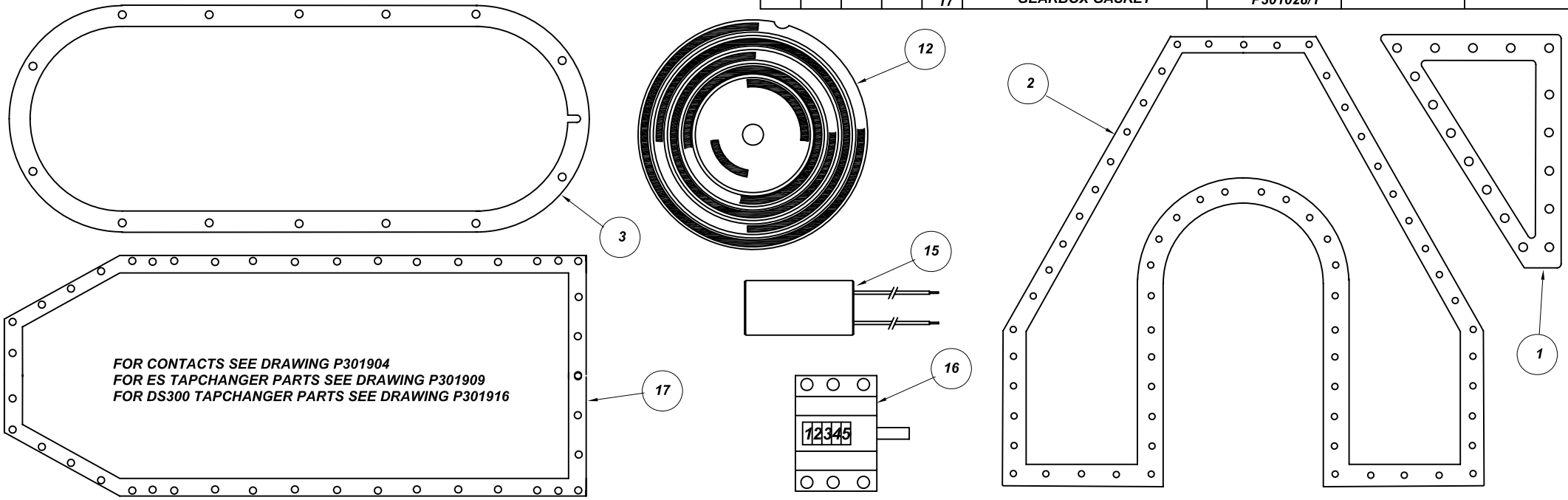

No	Revision notes	Date/Sig	No	Revision notes	Date/Sig	No	Revision notes	Date/Sig

Powerserve UK Limited
SERVING ELECTRICAL UTILITIES

TO CONTACT US
TEL: +44(0)1279-418630
FAX: +44(0)1279-210097
WEB: www.powerserveuk.com
EMAIL: info@powerserveuk.com

Scale NTS | Drawn ACS | Checked AJT | Approved AJT | Date 10/03/10

REPLACEMENT PARTS FOR FERRANTI TYPE DS2 TAPCHANGER

RE No: P301905

Sheet No

REV 0

TO CONTACT US - TEL: +44(0)1279-418630 WEB: www.powerserveuk.com EMAIL: info@powerserveuk.com

All information contained in this document is confidential and the copyright reserved

Used on dwg MANUAL

P301906

Quantity D	Quantity C	Quantity B	Quantity A	No	Description	Detail No	Nat Com Code	OEM Part No
			12	1	AUX & TRANSITIONAL CONTACTS	P301024/A	35-37-472	
			6	2	MOVING CONTACT ASSEMBLY	P301024/B	35-37-448	

NOTES:
1) For Auxiliary and Transitional Contact Arm Assemblies see dwg P301914
2) For Main Finger Contact Assembly see drawing P301912

GROUP A - FULL SET OF FIXED AND MOVING CONTACTS

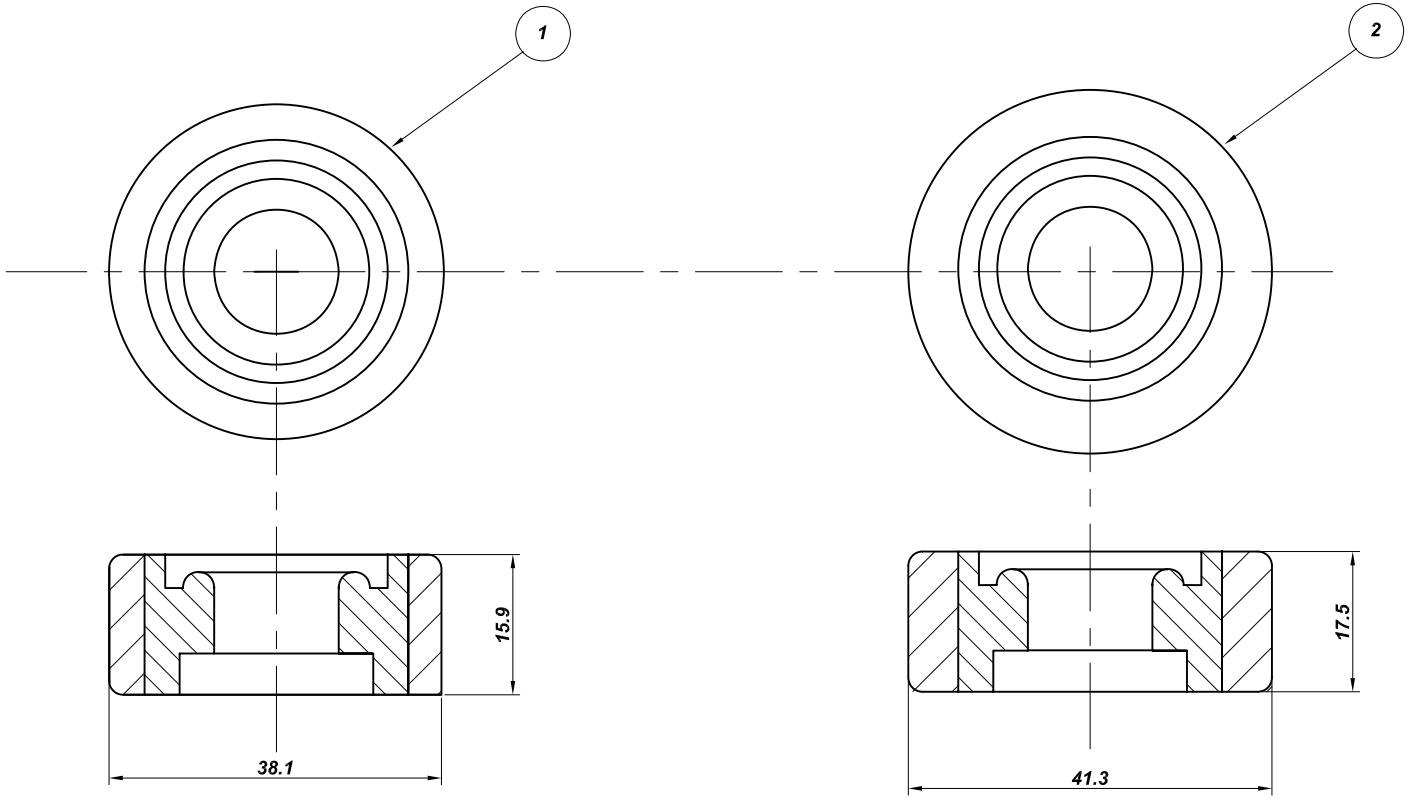

No	Revision notes	Date/Sig	No	Revision notes	Date/Sig	No	Revision notes	Date/Sig

Powerserve UK Limited
SERVING ELECTRICAL UTILITIES

TO CONTACT US
TEL: +44(0)1279-418630
FAX: +44(0)1279-210097
WEB: www.powerserveuk.com
EMAIL: info@powerserveuk.com

REPLACEMENT PARTS FOR TYPES FC6, FL12, GC6, HR6 CG12, HR14 & HR18 TAPCHANGERS

Scale NTS | Drawn ACS | Checked AJT | Approved AJT | Date 10/03/10

RE No P301906 | REV 0

Sheet No

Form No 3-7.3.6-A3 Rev B

TO CONTACT US - TEL: +44(0)1279-418630 WEB: www.powerserveuk.com EMAIL: info@powerserveuk.com

All information contained in this document is confidential and the copyright reserved

Used on dwg MANUAL

P301909

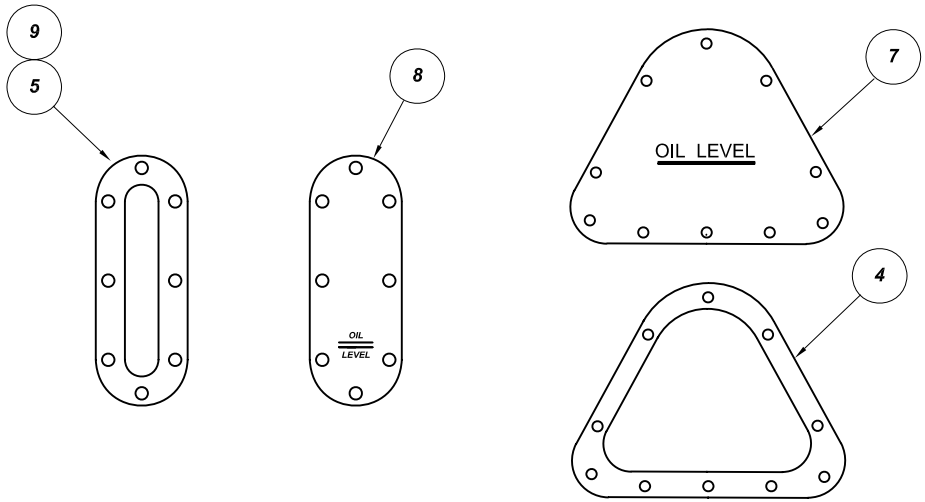

Quantity D	Quantity C	Quantity B	Quantity A	No	Description	Detail No		OEM Part No
			2	1	SIDE COVER GASKET	P301031/2		
				2	SELECTOR COVER GASKET	P301001/2		
				3	GEARBOX GASKET	P301028/1		
	1			4	GEARBOX SIGHT GLASS GASKET	P301004/1		
		2		5	SELECTOR SIGHT GLASS GASKET	P301032/2		
				6	SELECTOR AIR VENT GASKET	P300029/1	not shown	
	1			7	GEARBOX SIGHT GLASS	P301010/1		
		1		8	SELECTOR SIGHT GLASS	P301032/3		
		1		9	SELECTOR SIGHT GLASS CLAMP	P301032/1		
				10	WINDOW GASKET	P301909/10	not shown	
				11	PORT FLANGE GASKET	P301909/11	not shown	
				12	GEARBOX GASKET	P301002/1		
				13	CAPACITOR (12uF) FOR MOTOR	P301057/1		
				14	TAPCHANGER COUNTER	P301058/1		

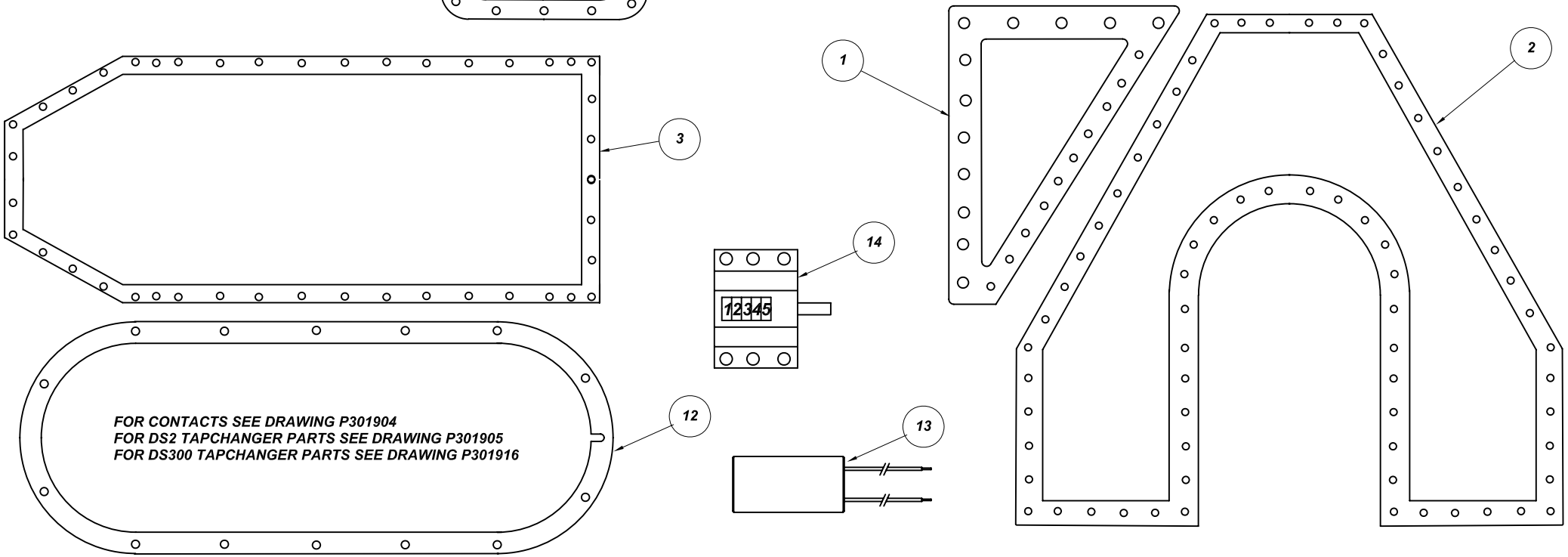

No	Revision notes	Date/Sig	No	Revision notes	Date/Sig	No	Revision notes	Date/Sig

Powerserve UK Limited
SERVING ELECTRICAL UTILITIES

TO CONTACT US
TEL: +44(0)1279-418630
FAX: +44(0)1279-210097
WEB: www.powerserveuk.com
EMAIL: info@powerserveuk.com

Scale NTS | Drawn ACS | Checked AJT | Approved AJT | Date 10/03/10

REPLACEMENT GASKETS AND SIGHT GLASSES FOR FERRANTI TYPE ES TAPCHANGERS

RE No: P301909

REV: 0

Sheet No

TO CONTACT US - TEL: +44(0)1279-418630 WEB: www.powerserveuk.com EMAIL: info@powerserveuk.com

All information contained in this document is confidential and the copyright reserved

Used on dwg MANUAL

P301910

Quantity D	Quantity C	Quantity B	Quantity A	No	Description	Detail No		OEM Part No
				1	SELECTOR MOULDING	P301054/A		
				2	SELECTOR MOULDING	P301021/A		

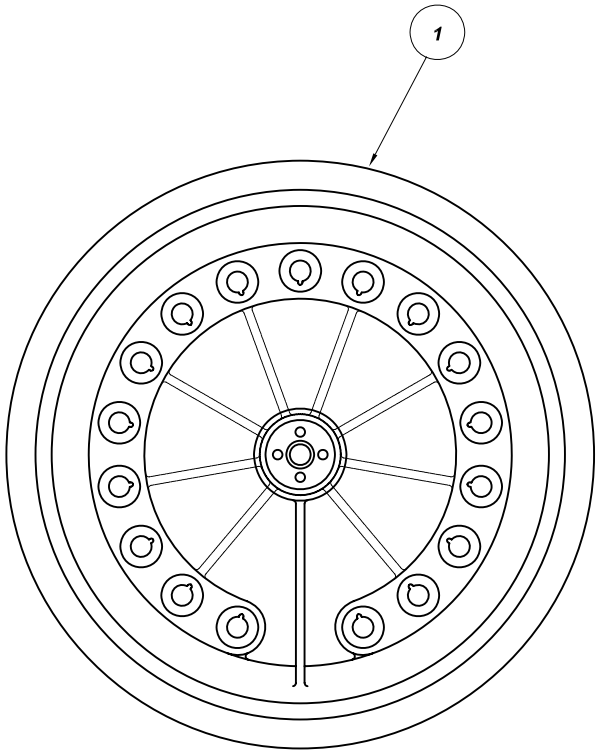

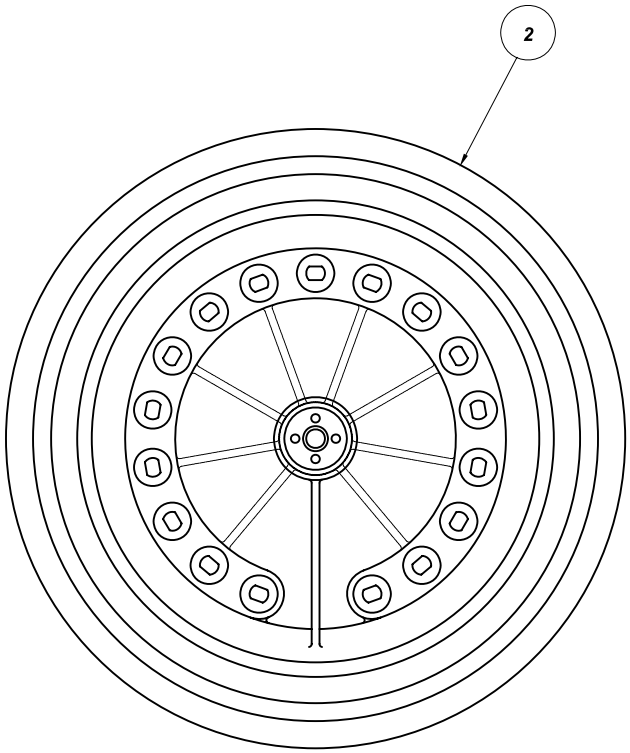

No	Revision notes	Date/Sig	No	Revision notes	Date/Sig	No	Revision notes	Date/Sig

Powerserve UK Limited
SERVING ELECTRICAL UTILITIES

TO CONTACT US
TEL: +44(0)1279-418630
FAX: +44(0)1279-210097
WEB: www.powerserveuk.com
EMAIL: info@powerserveuk.com

Scale NTS | Drawn ACS | Checked AJT | Approved AJT | Date 10/03/10

REPLACEMENT SELECTOR MOULDINGS FOR FERRANTI TAPCHANGERS

RE No: P301910

Sheet No

REV 0

TO CONTACT US - TEL: +44(0)1279-418630 WEB: www.powerserveuk.com EMAIL: info@powerserveuk.com

All information contained in this document is confidential and the copyright reserved

Used on dwg MANUAL

P301911

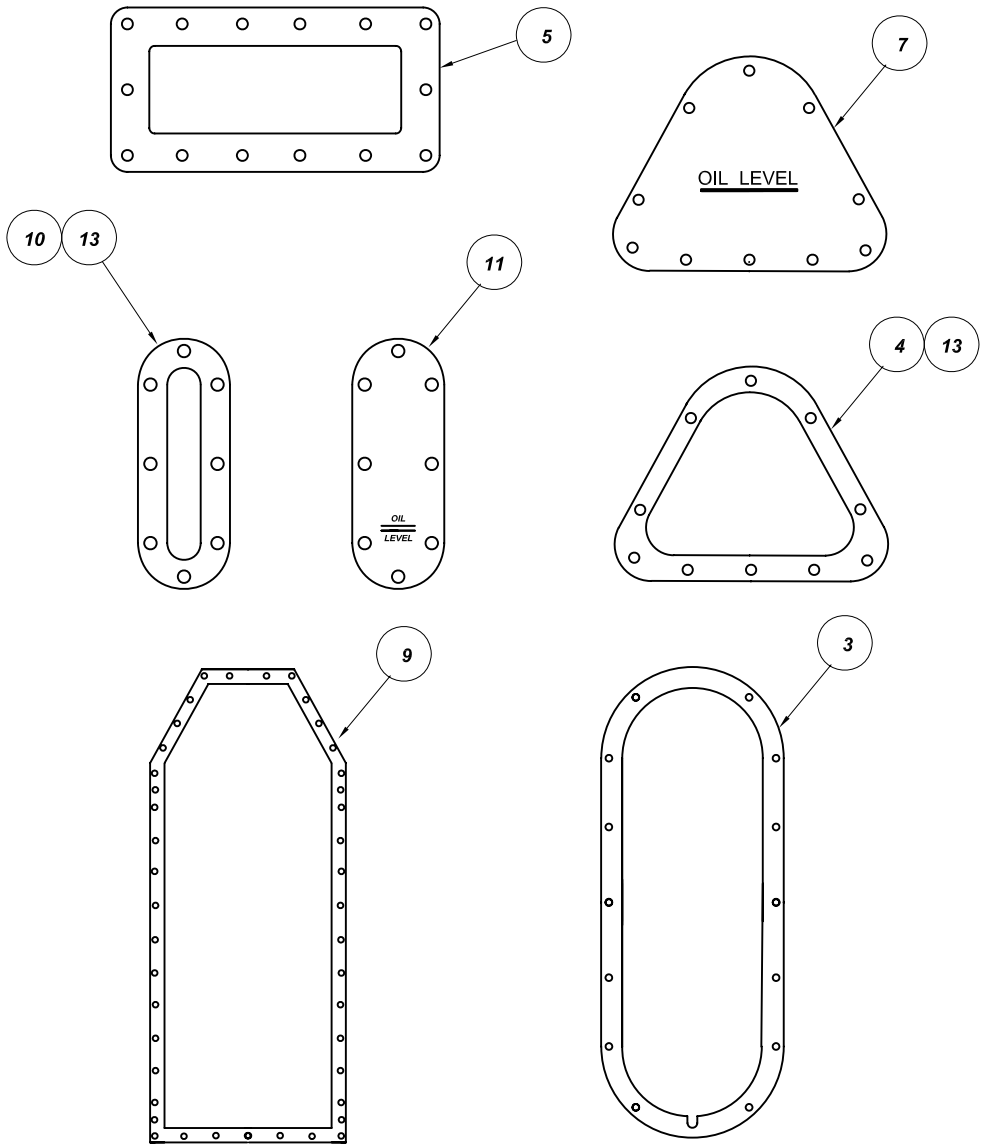

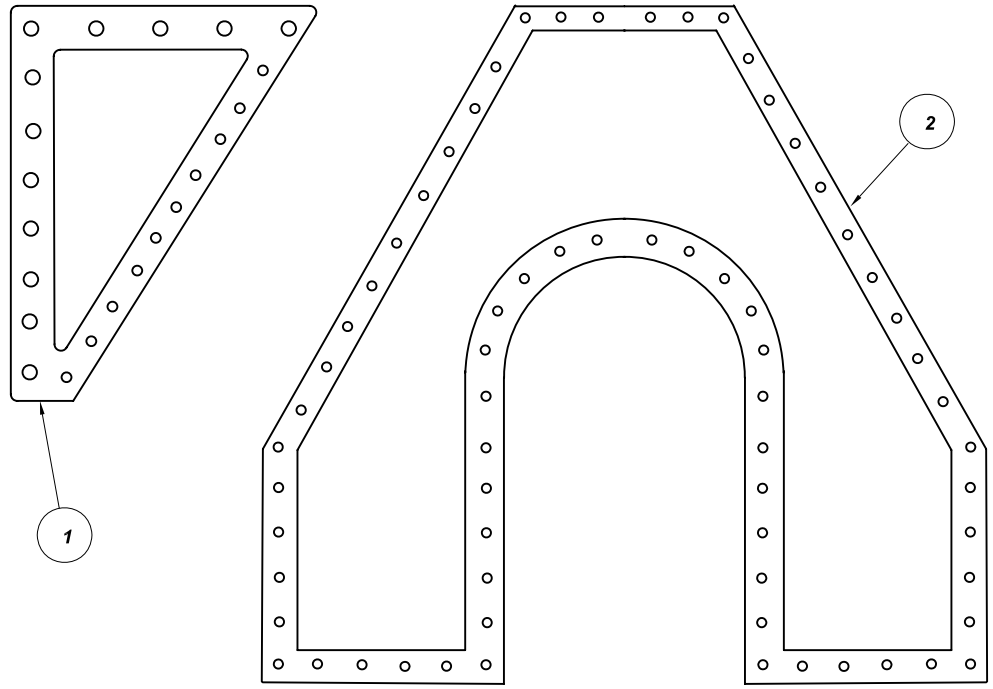

Quantity D	Quantity C	Quantity B	Quantity A	No	Description	Detail No		OEM Part No
			2	1	SIDE COVER GASKET	P301042/1		
				2	SELECTOR COVER GASKET	P301043/1		
				3	GEARBOX GASKET	P301002/1		
				4	GEARBOX SIGHT GLASS GASKET	P301004/1		
				5	SELECTOR TOP POCKET GASKET	P301045/1		
				6	SELECTOR AIR VENT GASKET	P300029/1	not shown	
				7	GEARBOX SIGHT GLASS	P301010/1		
				8	MAIN GASKET	P301044/1	not shown	
				9	GASKET - FABRICATED GEARBOX	P301028/1		
		1		10	OIL LEVEL SIGHT GLASS GASKET	P301032/2		
		1		11	OIL LEVEL SIGHT GLASS	P301032/2		
		1		12	OIL LEVEL CLAMP BLOCK	P301032/1		
				13	GEARBOX SIGHT GLASS CLAMP	P301004/2		
				14	OIL LEVEL ALARM/RELAY GASKET	P301050/1	not shown	

No	Revision notes	Date/Sig	No	Revision notes	Date/Sig	No	Revision notes	Date/Sig

Powerserve UK Limited
SERVING ELECTRICAL UTILITIES

TO CONTACT US
TEL: +44(0)1279-418630
FAX: +44(0)1279-210097
WEB: www.powerserveuk.com
EMAIL: info@powerserveuk.com

Scale NTS | Drawn ACS | Checked AJT | Approved AJT | Date 09/03/10

GASKETS AND SIGHT GLASSES FOR FERRANTI TYPE DS5 TAPCHANGERS

RE No: P301911

Sheet No

REV 0

Form No 3-7.3.6-A3 Rev B

TO CONTACT US - TEL: +44(0)1279-418630 WEB: www.powerserveuk.com EMAIL: info@powerserveuk.com

All information contained in this document is confidential and the copyright reserved

Used on dwg MANUAL

P301912

Quantity E	Quantity D	Quantity C	Quantity B	Quantity A	No	Description	Detail No	Nat Com No	OEM Part No
1			1		1	MAIN CONTACT BRACKET RH	P301035/1	35/37/478	
	1			1	2	MAIN CONTACT BRACKET LH	P301035/2	35/37/476	
1	1	6	1	1	3	MAIN CONTACT	P301034/1		
4	4		4	4	4	RIVET DOMED HEAD 1/8"-1/8"LONG			
4	4		4	4	5	RIVET CSK HEAD 1/8"-1/4 LONG			
2	2				6	SPRING	P900002/7	35/37/475	
1	1				7	PIVOT, STUD & WASHERS KIT	P301051/A		

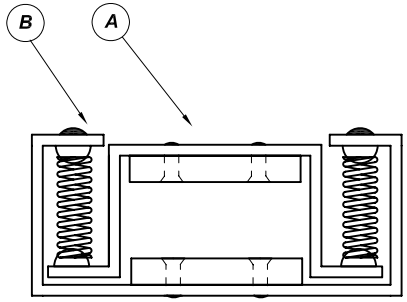

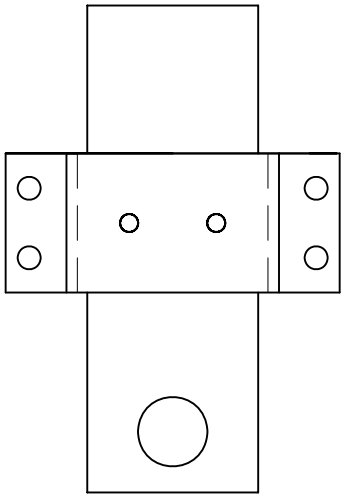

GROUP A-LEFT HAND

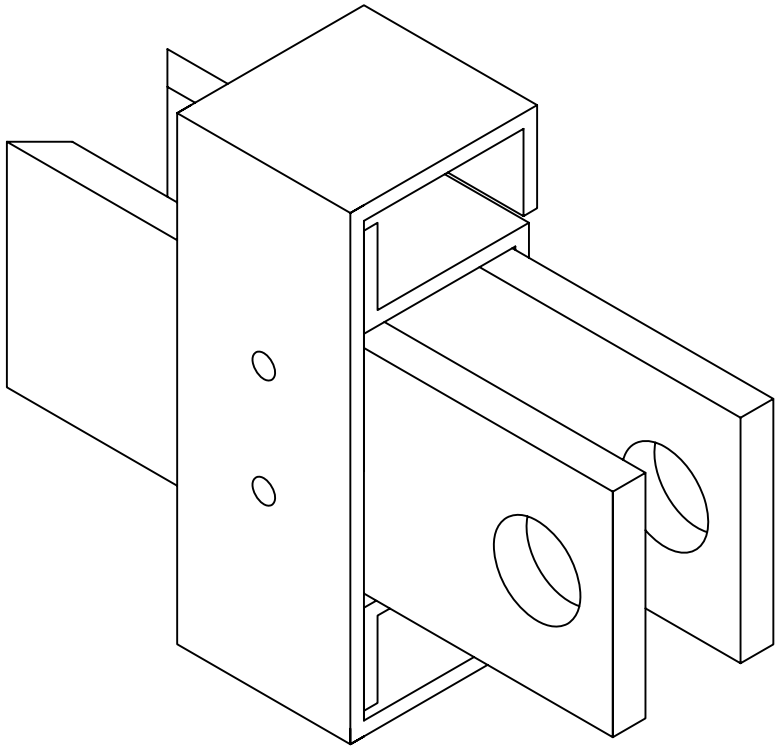

No	Revision notes	Date/Sig	No	Revision notes	Date/Sig	No	Revision notes	Date/Sig

Powerserve UK Limited
SERVING ELECTRICAL UTILITIES

TO CONTACT US
TEL: +44(0)1279-418630
FAX: +44(0)1279-210097
WEB: www.powerserveuk.com
EMAIL: info@powerserveuk.com

Scale NTS | Drawn ACS | Checked AJT | Approved AJT | Date 09/03/10

REPLACEMENT CONTACT ASSEMBLY FOR FERRANTI TYPE FC6 TAPCHANGER

RE No P301912 REV 0

Sheet No

TO CONTACT US - TEL: +44(0)1279-418630 WEB: www.powerserveuk.com EMAIL: info@powerserveuk.com

All information contained in this document is confidential and the copyright reserved

Used on dwg MANUAL

P301914

NOTES:-

1) Friction Pad (dets 7 & 12) and Contact Arm (dets 10 & 11) are handed, all other items common

2) For Auxiliary, Transition and Main Moving contacts, see Drawing P301906

Quantity D	Quantity C	Quantity B	Quantity A	No	Description	Detail No	Nat Com No	OEM Part No
1	1	1	1	1	ROLLER CONTACT	P301024/A	35/37/472	
1	1	1	1	2	SPRING	P900002/8	35/37/449	
	1		1	3	FRICTION RING	P301040/2	35/37/473	
		1	1	4	BOSS BEARING	P301048/1		
1	1	1	1	5	NUT	P301007/4	35/37/474	
1	1	1	1	6	PIN (Split)	3/32" x 3/4"	03/08/035	
		8	8	7	FRICTION PAD	P301041/1	35/37/452	
		8	8	8	SPRING	P900002/6	35/37/453	
1	1	1	1	9	SHOULDER BOLT	P301007/5	35/37/471	
			1	10	ARM AUXILIARY CONTACT	P301046/A		
		1		11	ARM TRANSITIONAL CONTACT	P301046/B		
1		1		12	FRICTION RING	P301040/1		

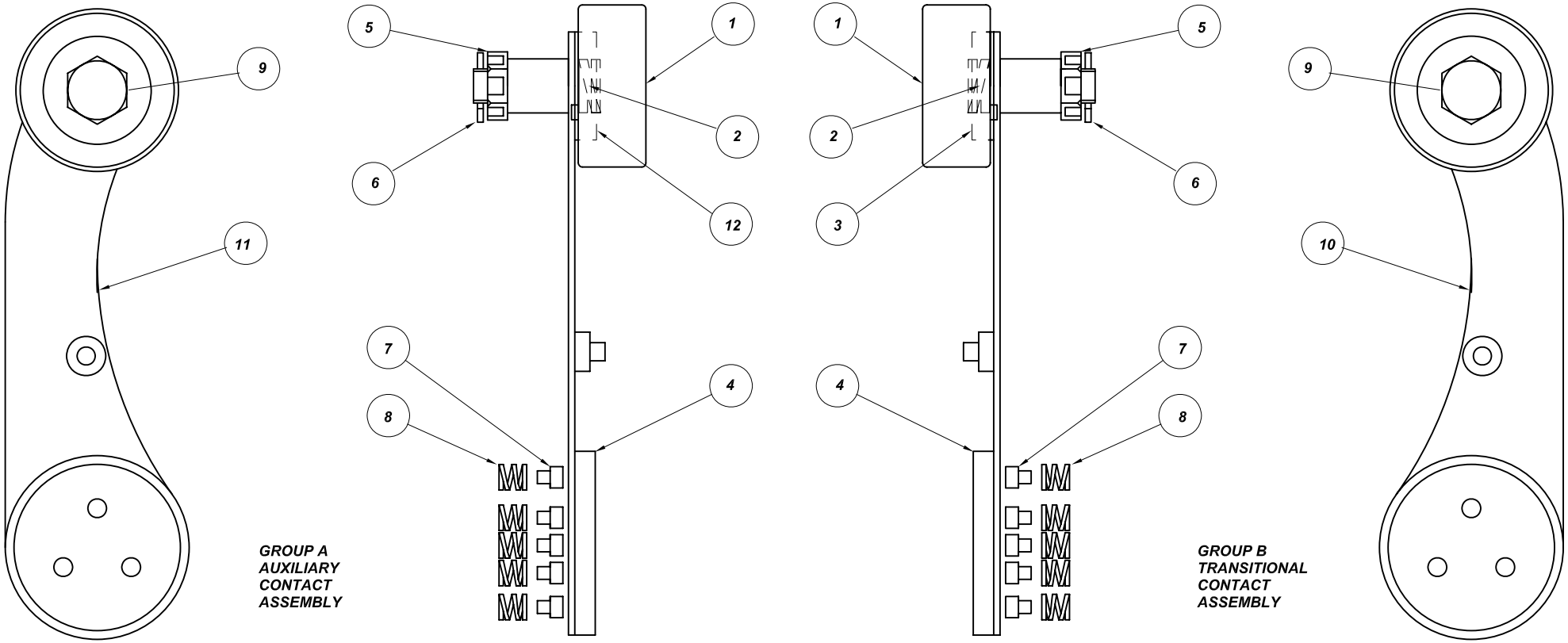

No	Revision notes	Date/Sig	No	Revision notes	Date/Sig	No	Revision notes	Date/Sig

Powerserve UK Limited
SERVING ELECTRICAL UTILITIES

TO CONTACT US
TEL: +44(0)1279-418630
FAX: +44(0)1279-210097
WEB: www.powerserveuk.com
EMAIL: info@powerserveuk.com

AUXILIARY AND TRANSITIONAL CONTACT ASSEMBLIES FOR FC6 T/C'S

RE No P301914 REV 0

Scale NTS | Drawn ACS | Checked AJT | Approved AJT | Date 10/03/10 | Sheet No

Form No 3-7.3.6-A3 Rev B

TO CONTACT US - TEL: +44(0)1279-418630 WEB: www.powerserveuk.com EMAIL: info@powerserveuk.com

All information contained in this document is confidential and the copyright reserved

Used on dwg MANUAL

P301916

Quantity D	Quantity C	Quantity B	Quantity A	No	Description	Detail No		OEM Part No
			2	1	SIDE COVER GASKET	P301031/2		
				2	SELECTOR COVER GASKET	P301001/1		
				3	GEARBOX GASKET	P301028/1		
	1			4	GEARBOX SIGHT GLASS GASKET	P301004/1		
		2		5	SELECTOR SIGHT GLASS GASKET	P301032/2		
				6	SELECTOR AIR VENT GASKET	P300029/1	not shown	
	1			7	GEARBOX SIGHT GLASS	P301010/1		
		1		8	SELECTOR SIGHT GLASS	P301032/3		
		1		9	SELECTOR SIGHT GLASS CLAMP	P301032/1		
				10	WINDOW GASKET	P301916/10	not shown	
				11	PORT FLANGE GASKET	P301916/11	not shown	

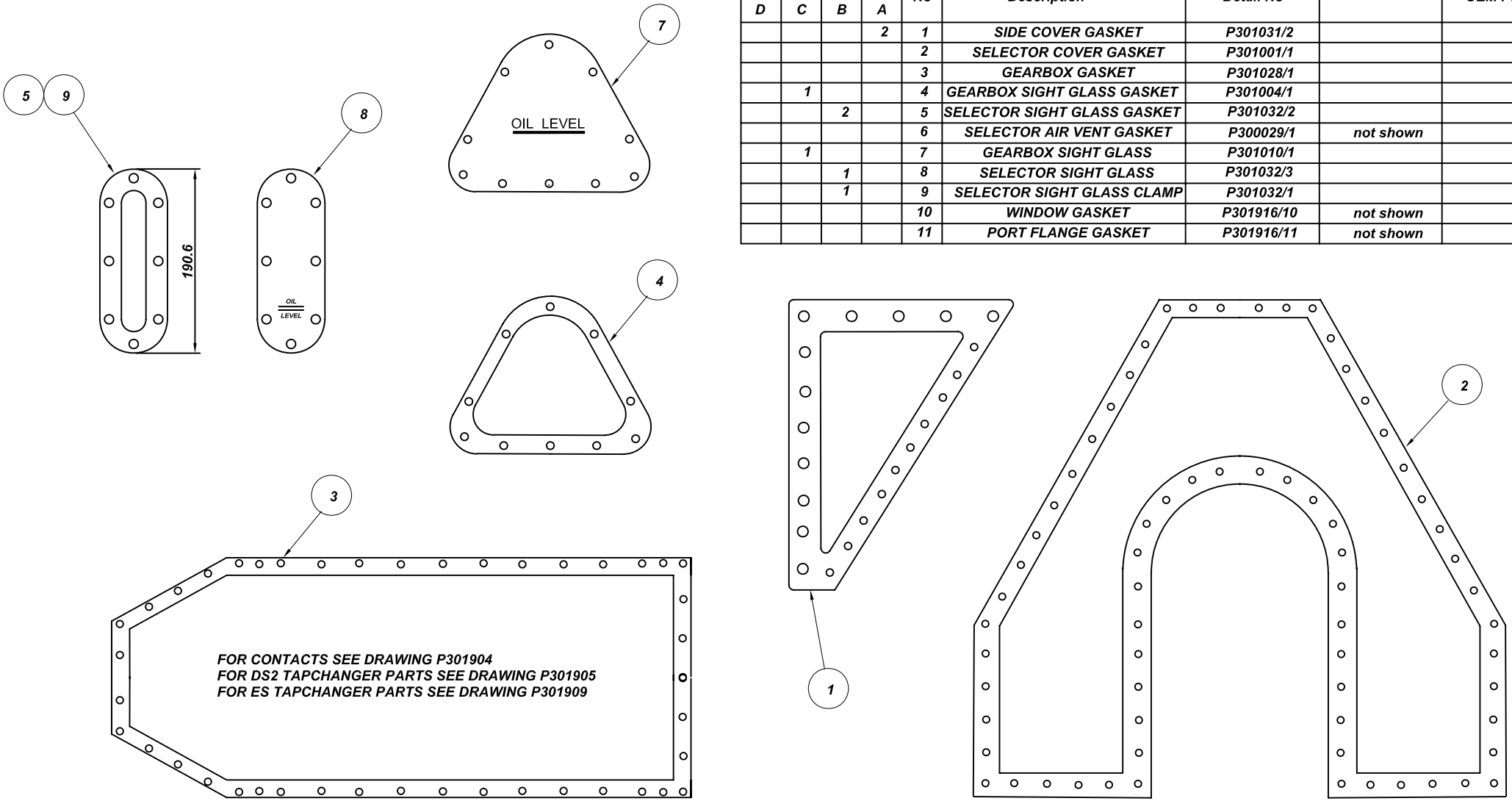

No	Revision notes	Date/Sig	No	Revision notes	Date/Sig	No	Revision notes	Date/Sig

Powerserve UK Limited
SERVING ELECTRICAL UTILITIES

TO CONTACT US
TEL: +44(0)1279-418630
FAX: +44(0)1279-210097
WEB: www.powerserveuk.com
EMAIL: info@powerserveuk.com

Scale NTS | Drawn ACS | Checked AJT | Approved AJT | Date 09/03/10

GASKETS & SIGHT GLASSES FOR FERRANTI TYPE DS300 TAPCHANGER

RE No P301916 REV 0

Sheet No

Form No 3-7.3.6-A3 Rev B

TO CONTACT US - TEL: +44(0)1279-418630 WEB: www.powerserveuk.com EMAIL: info@powerserveuk.com

All information contained in this document is confidential and the copyright reserved

Used on dwg MANUAL

P340901

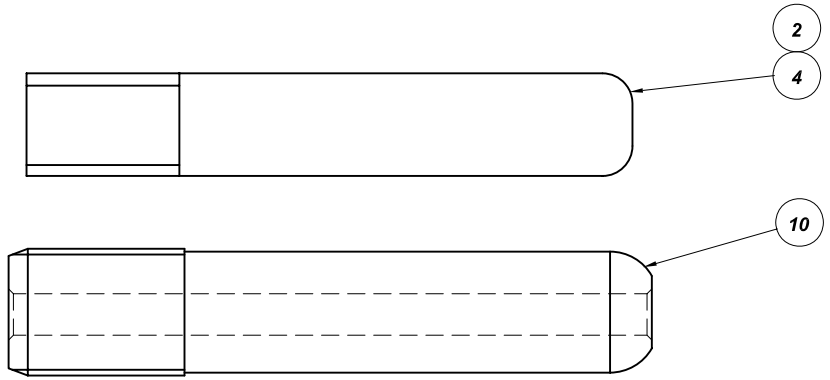

Quantity				No	Description	Detail No	Code	OEM Part No
D	C	B	A					
			6	1	FIXED CONTACT (STANDARD)	P340005/A	878 1301	
	6		6	2	MOVING CONTACT (STANDARD)	P340001/1	878 1300	
		6		3	FIXED CONTACT (EXT)	P340005/B		
		6		4	MOVING CONTACT (EXT)	P340001/B		
				5	TANK RUBBER GASKET SEAL	P340059/1	878 1072	
				6	TURBULATOR ASSEMBLY	P340029/A		
				7	FIXED CONTACT FINGER(PLATED)	P340003/1		
				8	FIXED CONTACT FINGER(UNPLATED)	P340003/2		
	6			9	FIXED CONTACT	P340064/A		
6				10	MOVING CONTACT	P340060/1		
6				11	FIXED CONTACT	P340065/A		

NOTE - GROUP A - A FIXED & MOVING KIT FOR FORM A2 400/800 AMP BREAKER
GROUP B - A FIXED & MOVING KIT AS GROUP A BUT LIFE EXTENSION
GROUP C - A FIXED & MOVING KIT FOR FORMS B2 & C2 400/800 AMP BREAKER
GROUP D - A FIXED & MOVING KIT FOR FORMS B2 & C2 1200 AMP BREAKER

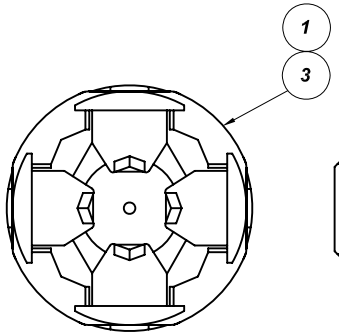

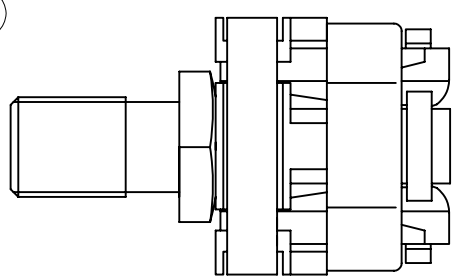

TYPICAL SIDE VIEW OF FIXED CONTACTS

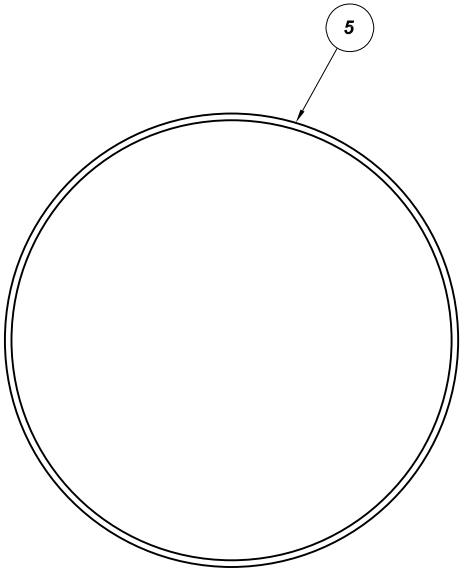

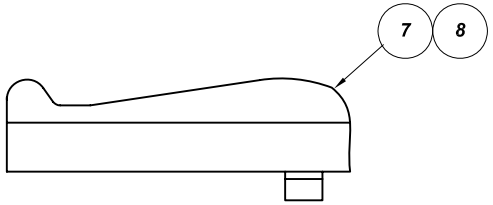

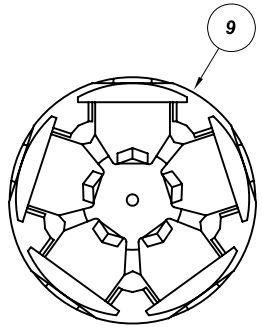

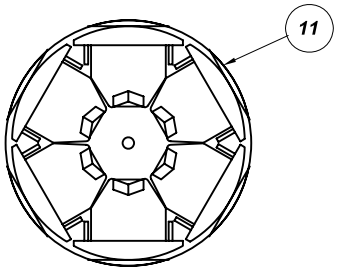

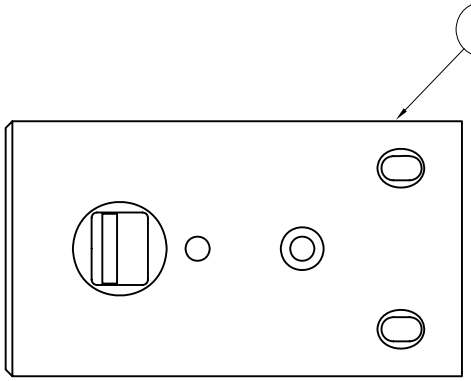

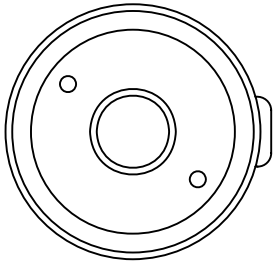

NOTE:- FOR OTHER BVRP CONTACTS SEE P340923

No	Revision notes	Date/Sig	No	Revision notes	Date/Sig	No	Revision notes	Date/Sig

Powerserve UK Limited
SERVING ELECTRICAL UTILITIES

TO CONTACT US
TEL: +44(0)1279-418630
FAX: +44(0)1279-210097
WEB: www.powerserveuk.com
EMAIL: info@powerserveuk.com

Scale NTS | Drawn ACS | Checked AJT | Approved AJT | Date 01/03/10

PATTERN FIXED AND MOVING CONTACTS FOR AEI/GEC BVRP17 SWGR

RE No | Sheet No | P340901 | REV 0

TO CONTACT US - TEL: +44(0)1279-418630 WEB: www.powerserveuk.com EMAIL: info@powerserveuk.com

All information contained in this document is confidential and the copyright reserved

Used on dwg MANUAL

P340916

Quantity D	Quantity C	Quantity B	Quantity A	No	Description	Detail No		OEM Part No
			12	1	FIXED & MOVING CONTACT ASSY	P340006/A		
		12		2	SELECTOR MOVING CONTACT	P340007/1		
		12		3	SELECTOR FIXED CONTACT	P340007/2		
				4	SEL TANK TOP COVER GASKET	P340075/1		

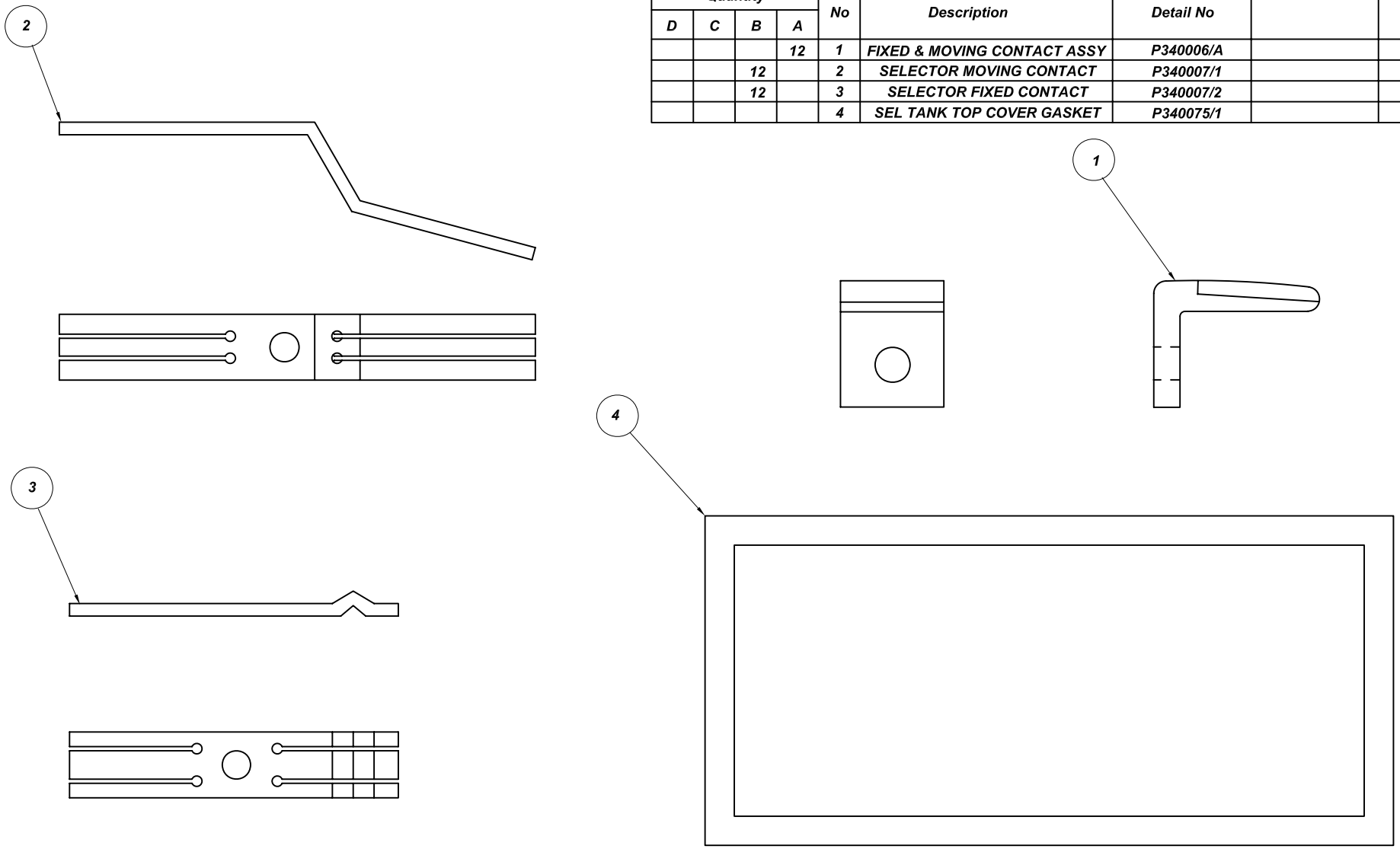

No	Revision notes	Date/Sig	No	Revision notes	Date/Sig	No	Revision notes	Date/Sig

Powerserve UK Limited
SERVING ELECTRICAL UTILITIES

TO CONTACT US
TEL: +44(0)1279-418630
FAX: +44(0)1279-210097
WEB: www.powerserveuk.com
EMAIL: info@powerserveuk.com

Scale NTS | Drawn ACS | Checked AJT | Approved AJT | Date 01/03/10

PATTERN FIXED & MOVING CONTACTS FOR GEC REACTOR TAPCHANGER

RE No P340916 REV 0

Sheet No

TO CONTACT US - TEL: +44(0)1279-418630 WEB: www.powerserveuk.com EMAIL: info@powerserveuk.com

All information contained in this document is confidential and the copyright reserved

Used on dwg MANUAL

P340917

Quantity D	Quantity C	Quantity B	Quantity A	No	Description	Detail No	Nat Com Code	OEM Part No
		6	6	1	MOVING CONTACT TIP(OFA12)	P340041/B		
			24	2	FIXED CONTACT FINGER	P340042/A		2D59152A
		36		3	FIXED CONT FINGER(SPECIAL)	P340041/A		
	1			4	FLEX CONNECTION SUPPORT	P340042/3		
	1			5	FLEXIBLE CONNECTION	P340042/4		
				6	MOVING CONTACT TIP	P340057/A	41-85-006	2D25321A
				7	FIXED CONTACT FINGER	P340042/B		2D49948A

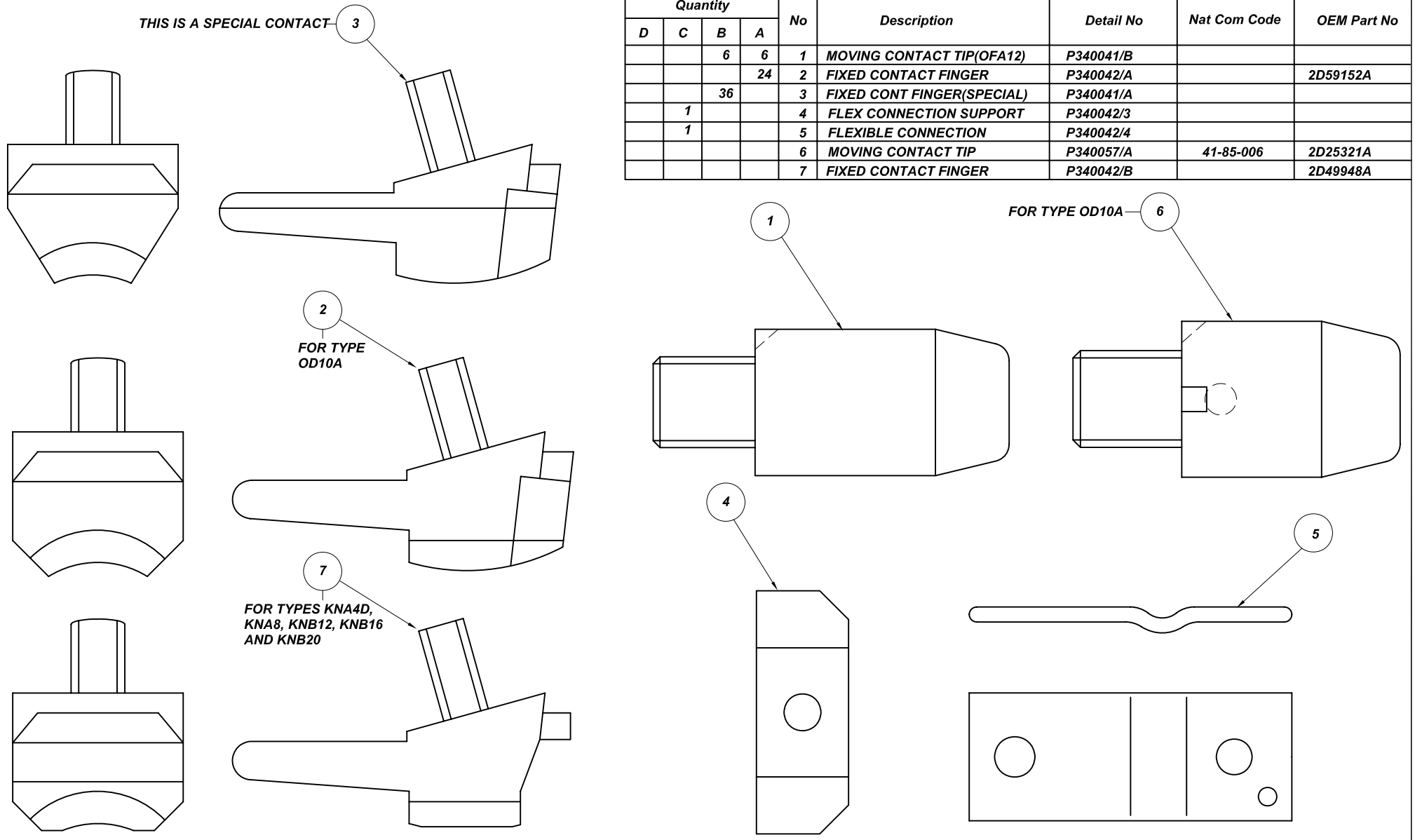

No	Revision notes	Date/Sig	No	Revision notes	Date/Sig	No	Revision notes	Date/Sig

Powerserve UK Limited
SERVING ELECTRICAL UTILITIES

TO CONTACT US
TEL: +44(0)1279-418630
FAX: +44(0)1279-210097
WEB: www.powerserveuk.com
EMAIL: info@powerserveuk.com

PATTERN FIXED & MOVING CONT'S - GEC TYPES OFA12, OD10A, KNA4, 8, 12, 16 & 20

Scale NTS | Drawn ACS | Checked AJT | Approved AJT | Date 01/03/10

RE No | Sheet No | P340917 | REV 0

Form No 3-7.3.6-A3 Rev B

TO CONTACT US - TEL: +44(0)1279-418630 WEB: www.powerserveuk.com EMAIL: info@powerserveuk.com

All information contained in this document is confidential and the copyright reserved

Used on dwg MANUAL

P340922

Quantity D	Quantity C	Quantity B	Quantity A	No	Description	Detail No		OEM Part No
				1	3/4" FIXED CONTACT (WITTON)	P340035/A	35-37-886	DD 14827-1
				2	1" FIXED CONTACT (WITTON)	P340036/A	35-37-887	DD 14827-2
				3	MOVING CONTACT (4 HOLE)	P340032/A	35-37-885	DD 37848
				4	MOVING CONTACT (5 HOLE)	P340033/A	Not Shown	DC 80807
				5	MOVING CONTACT (6 HOLE)	P340034/A	Not Shown	
				6	GASKET	P340058/1	Not Shown	

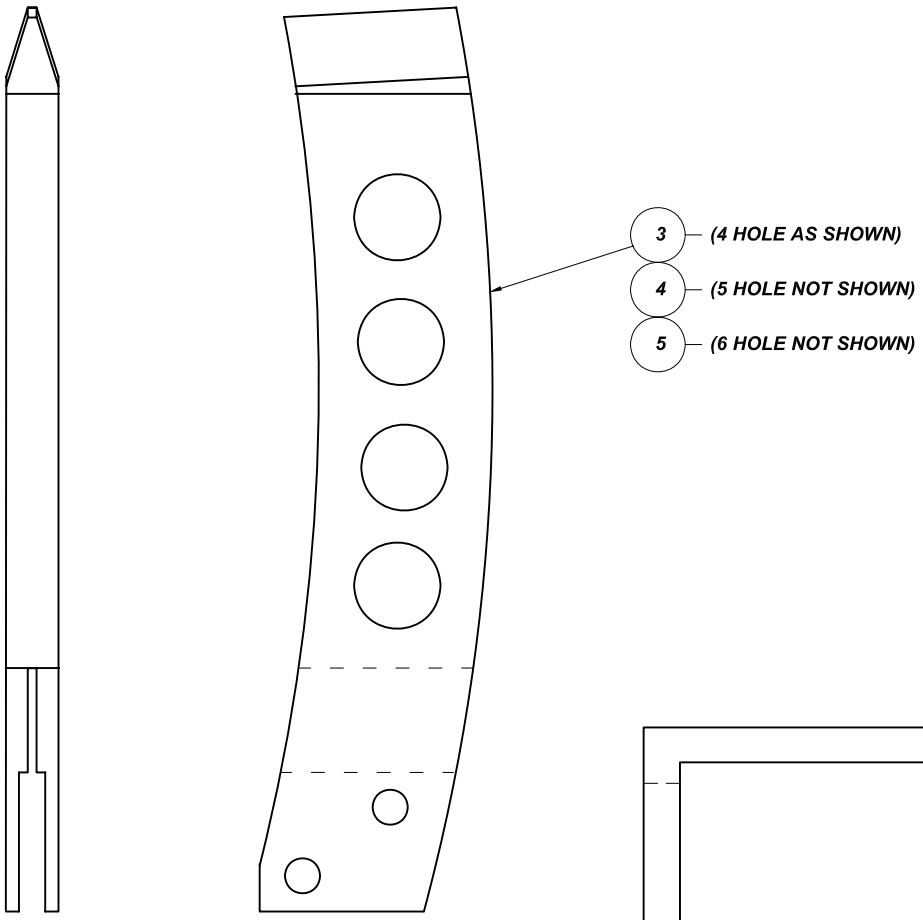

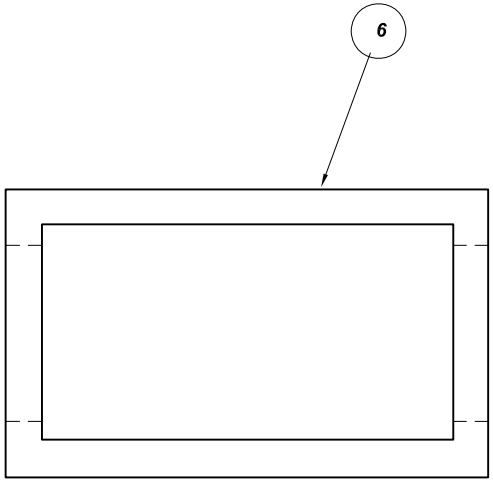

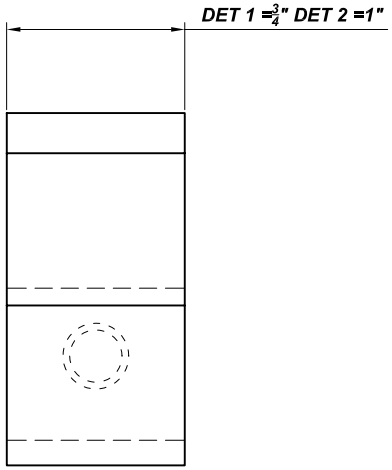

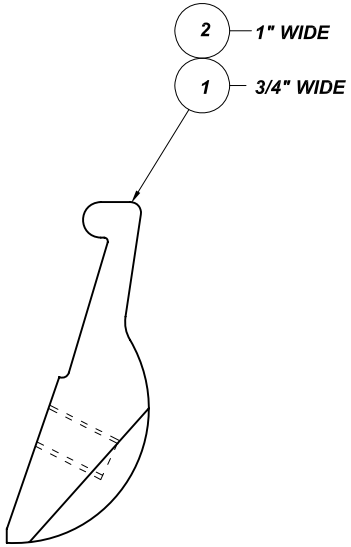

MK 1 1951 to 1958 (5 HOLE)
MK 2 1958 to 1964 (4 HOLE)
MK 3 1964 onwards (6 HOLE)

No	Revision notes	Date/Sig	No	Revision notes	Date/Sig	No	Revision notes	Date/Sig

Powerserve UK Limited
SERVING ELECTRICAL UTILITIES

TO CONTACT US
TEL: +44(0)1279-418630
FAX: +44(0)1279-210097
WEB: www.powerserveuk.com
EMAIL: info@powerserveuk.com

Scale NTS | Drawn ACS | Checked AJT | Approved AJT | Date 01/03/10

PATTERN FIXED AND MOVING CONTACTS FOR GEC TYPE J TAPCHANGER

RE No P340922 REV 0

Sheet No

TO CONTACT US - TEL: +44(0)1279-418630 WEB: www.powerserveuk.com EMAIL: info@powerserveuk.com

All information contained in this document is confidential and the copyright reserved

Used on dwg MANUAL

P340923

Quantity D	Quantity C	Quantity B	Quantity A	No	Description	Detail No		OEM Part No
			6	1	FIXED CONTACT - BVRP3	P340016/A		
				2	FIXED CONTACT - 7 FINGER	P340023/A		
				3	FIXED CONTACT - 6 FINGER	P340024/A		
				4	FIXED CONTACT - BVRP5	P340025/A		
			6	5	MOVING CONTACT - BVRP3	P340026/1		

NOTE: SEE DRAWING P340901 FOR BVRP17 CONTACTS

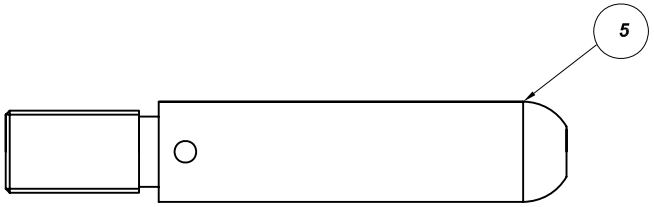

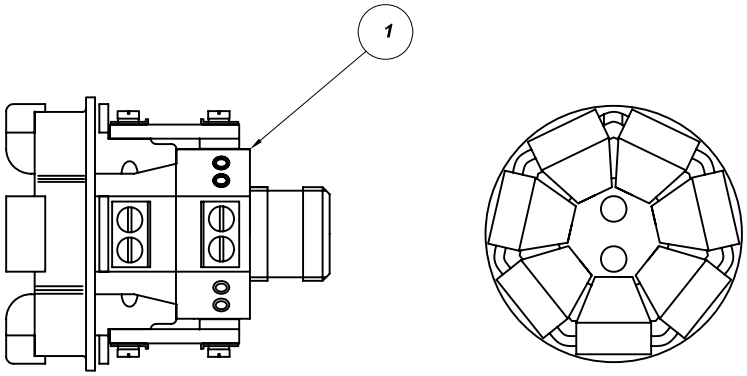

BVRP3 NOTE - NOT ALL FINGERS SHOWN FOR CLARITY

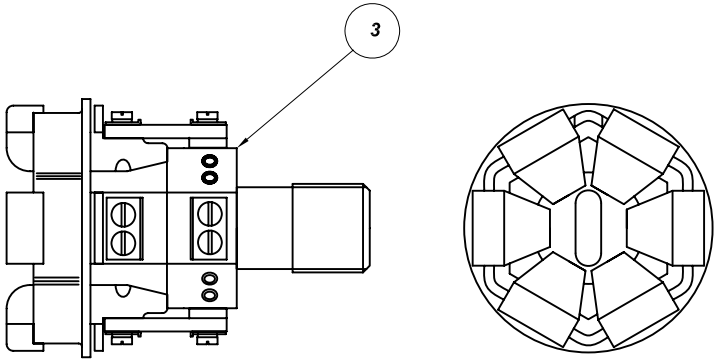

NOTE - NOT ALL FINGERS SHOWN FOR CLARITY

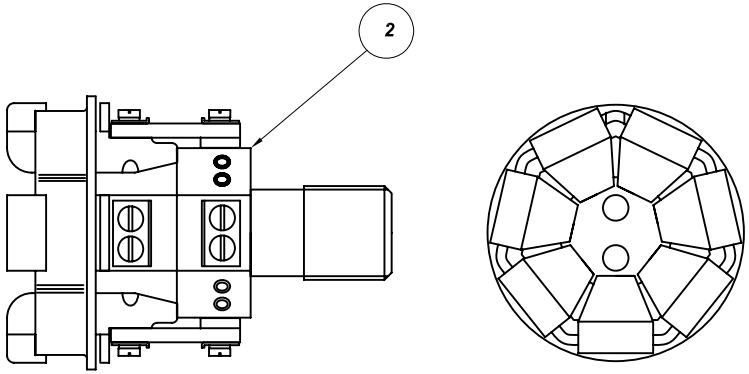

NOTE - NOT ALL FINGERS SHOWN FOR CLARITY

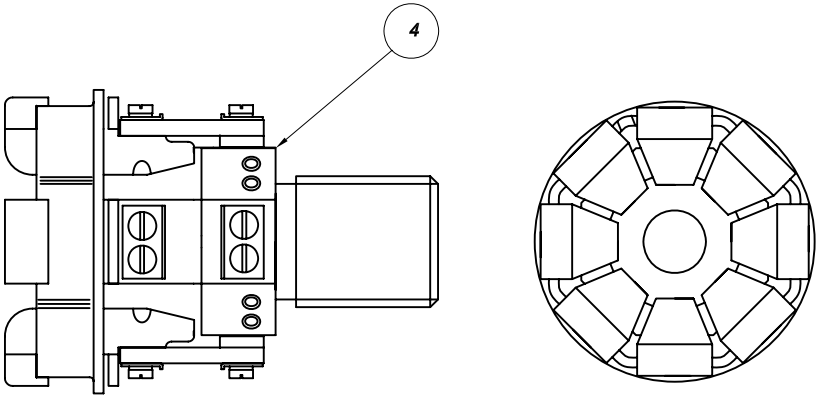

BVRP 5 NOTE - NOT ALL FINGERS SHOWN FOR CLARITY

No	Revision notes	Date/Sig	No	Revision notes	Date/Sig	No	Revision notes	Date/Sig

Powerserve UK Limited
SERVING ELECTRICAL UTILITIES

TO CONTACT US
TEL: +44(0)1279-418630
FAX: +44(0)1279-210097
WEB: www.powerserveuk.com
EMAIL: info@powerserveuk.com

PATTERN FIXED AND MOVING CONTACTS FOR GEC BVP/BVRP RANGE

Scale NTS | Drawn ACS | Checked AJT | Approved AJT | Date 01/03/10

RE No | Sheet No | P340923 | REV 0

TO CONTACT US - TEL: +44(0)1279-418630 WEB: www.powerserveuk.com EMAIL: info@powerserveuk.com

All information contained in this document is confidential and the copyright reserved

Used on dwg MANUAL

P340924

Quantity D	Quantity C	Quantity B	Quantity A	No	Description	Detail No		OEM Part No
			3	1	SIGHT GLASS	P340055/1		
			1	2	GASKET (THICK)	P340055/2		
			2	3	SLOTTED TAPER PIN			
			4	4	GASKET (THIN)	P340055/4		
			1	5	GASKET (SQUARE HOLE)	P340055/5		
			3	6	SPLIT PIN			
			12	7	WAVY WASHER			

NOTES: -
1) SIGHT GLASSES TO BE INDIVIDUALLY WRAPPED IN TISSUE
2) SIGHT GLASSES TO RETAIN PROTECTIVE FILM
3) KITS TO BE PACKED IN SEALED CLEAR BAGS

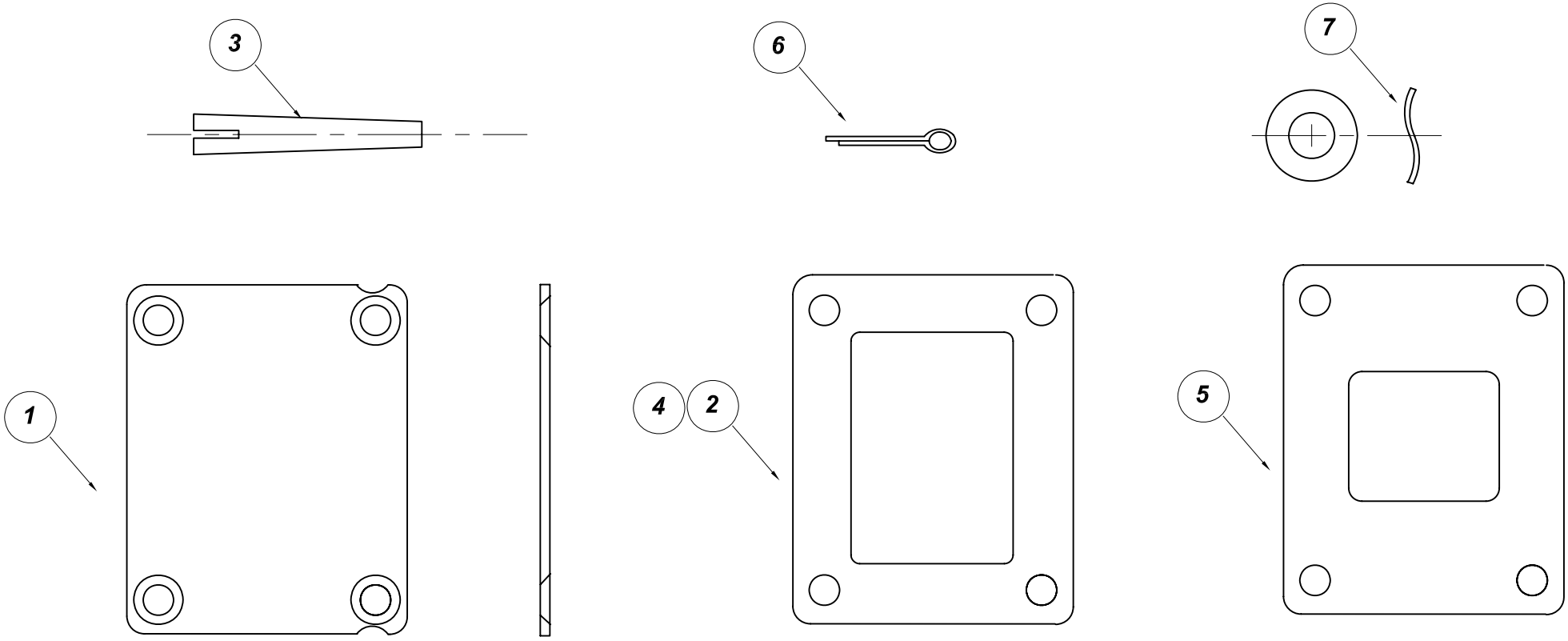

No	Revision notes	Date/Sig	No	Revision notes	Date/Sig	No	Revision notes	Date/Sig

Powerserve UK Limited
SERVING ELECTRICAL UTILITIES

TO CONTACT US
TEL: +44(0)1279-418630
FAX: +44(0)1279-210097
WEB: www.powerserveuk.com
EMAIL: info@powerserveuk.com

SIGHT GLASS AND GASKET KIT

Scale NTS | Drawn ACS | Checked AJT | Approved AJT | Date 01/03/10

RE No P340924 REV 0

Sheet No

Form No 3-7.3.6-A3 Rev B

TO CONTACT US - TEL: +44(0)1279-418630 WEB: www.powerserveuk.com EMAIL: info@powerserveuk.com

All information contained in this document is confidential and the copyright reserved

Used on dwg MANUAL

P340925

Quantity D	Quantity C	Quantity B	Quantity A	No	Description	Detail No		OEM Part No
				1	MAIN BLADE CONTACT	P340055/A		
				2	AUX BLADE CONTACT	P340055/B		
				3	MOVING CONTACT	P340056/A		

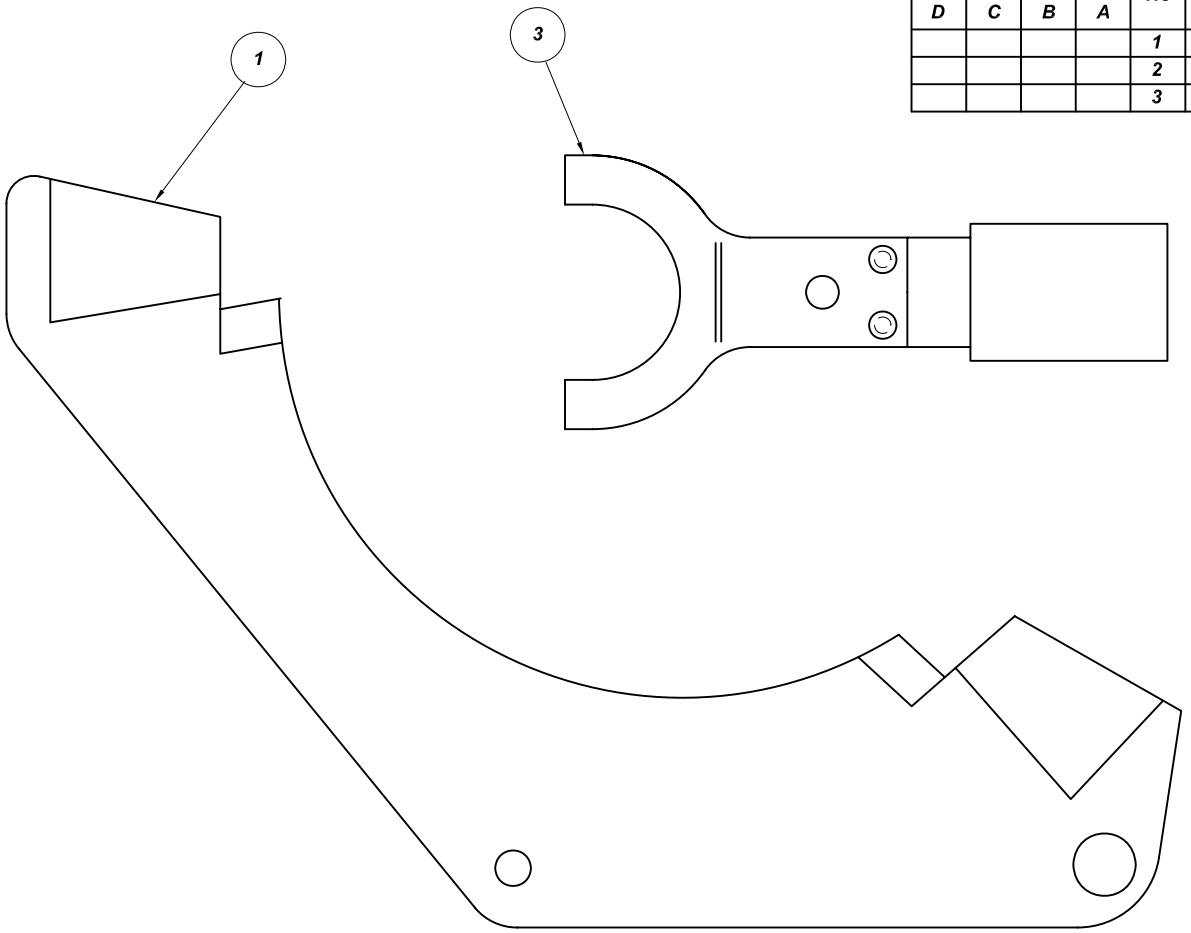

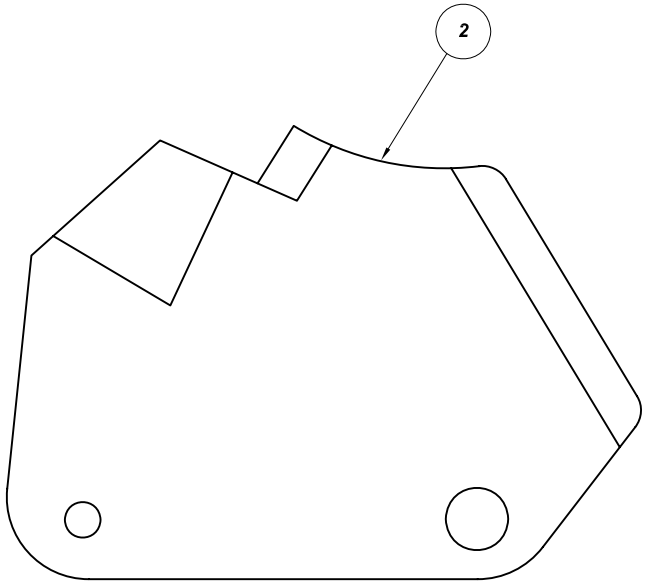

No	Revision notes	Date/Sig	No	Revision notes	Date/Sig	No	Revision notes	Date/Sig

Powerserve UK Limited
SERVING ELECTRICAL UTILITIES

TO CONTACT US
TEL: +44(0)1279-418630
FAX: +44(0)1279-210097
WEB: www.powerserveuk.com
EMAIL: info@powerserveuk.com

Scale NTS Drawn ACS Checked AJT Approved AJT Date 01/03/10

PATTERN FIXED AND MOVING CONTACTS FOR ATL/GEC TYPE SD TAPCHANGER

RE No P340925 REV 0

Sheet No

TO CONTACT US - TEL: +44(0)1279-418630 WEB: www.powerserveuk.com EMAIL: info@powerserveuk.com

All information contained in this document is confidential and the copyright reserved

Used on dwg MANUAL

P340926

Quantity D	Quantity C	Quantity B	Quantity A	No	Description	Detail No	Nat Com Code	OEM Part No
				1	MOVING CONTACT TIP	P340057/A	41-85-006	2D25321A
				2	FIXED CONTACT FINGER	P340042/A		2D59152A
				3	FIXED CONTACT ASSEMBLY	P340063/A		
				4	FLEX CONNECTION SUPPORT	P340042/3		
				5	FLEXIBLE CONNECTION	P340042/4		

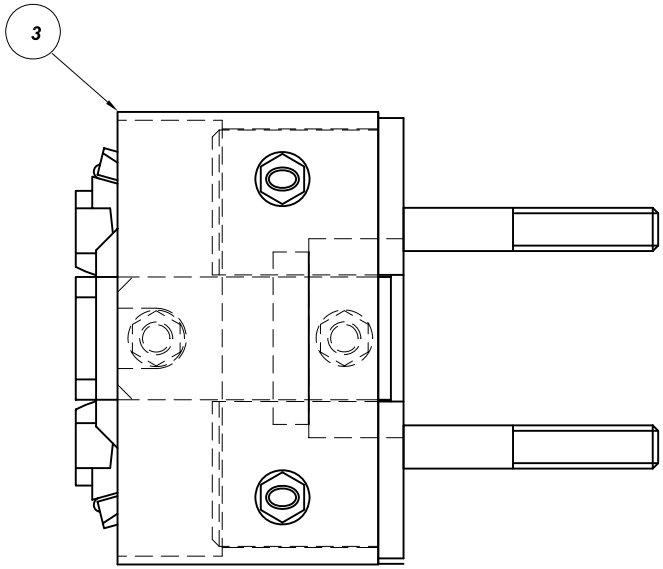

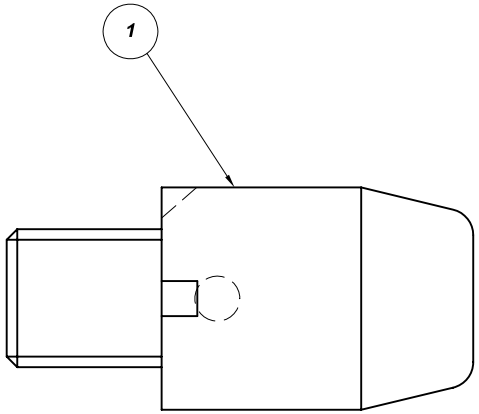

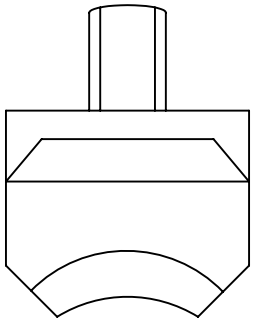

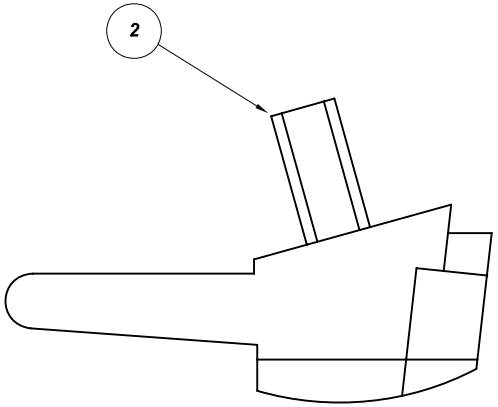

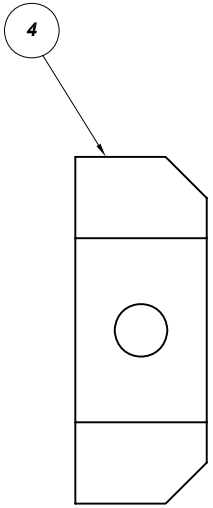

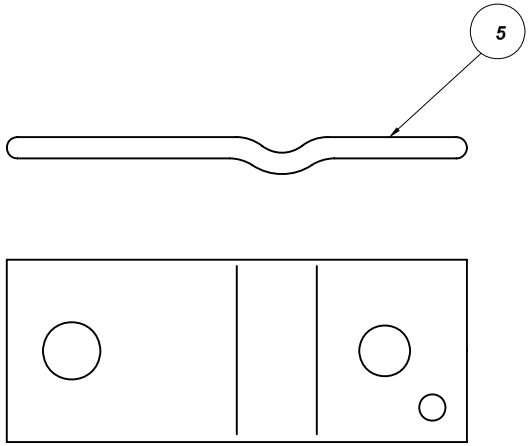

No	Revision notes	Date/Sig	No	Revision notes	Date/Sig	No	Revision notes	Date/Sig

Powerserve UK Limited
SERVING ELECTRICAL UTILITIES

TO CONTACT US
TEL: +44(0)1279-418630
FAX: +44(0)1279-210097
WEB: www.powerserveuk.com
EMAIL: info@powerserveuk.com

pATTERN FIXED AND CONTACTS FOR TYPE OFA11 SWITCHGEAR

Scale NTS | Drawn ACS | Checked AJT | Approved AJT | Date 01/03/10

RE No | Sheet No | P340926 | REV 0

TO CONTACT US - TEL: +44(0)1279-418630 WEB: www.powerserveuk.com EMAIL: info@powerserveuk.com

All information contained in this document is confidential and the copyright reserved

Used on dwg MANUAL

P340927

Quantity D	Quantity C	Quantity B	Quantity A	No	Description	Detail No	Nat Com Code	OEM Part No
				1	MOVING CONTACT TIP	P340057/A	41-85-006	2D25321A
				2	FIXED CONTACT FINGER	P340042/A		2D59152A
				3	FIXED CONTACT ASSEMBLY	P340068/A		
				4	FLEX CONNECTION SUPPORT	P340042/3		
				5	FLEXIBLE CONNECTION	P340042/4		

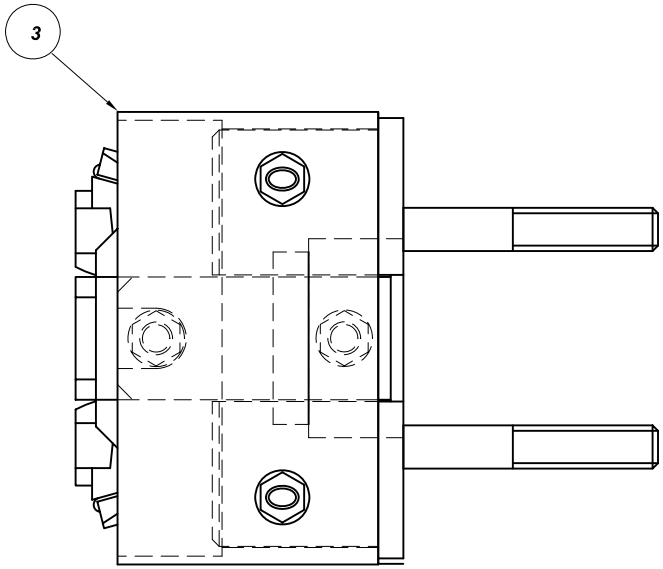

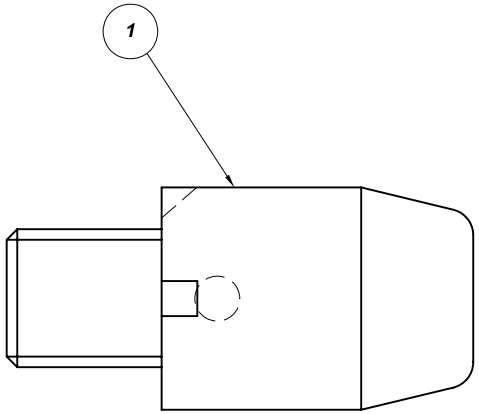

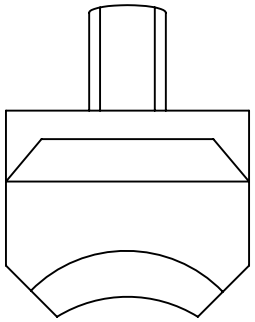

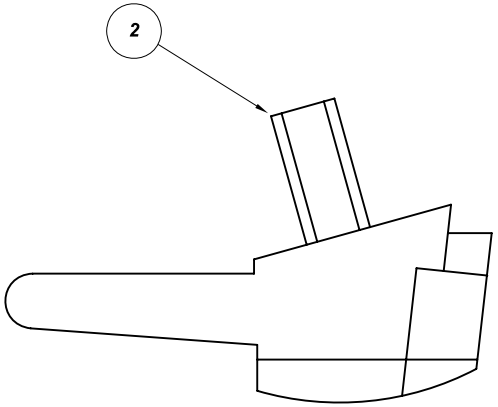

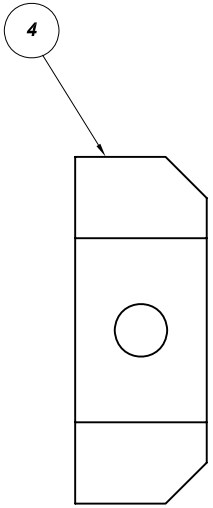

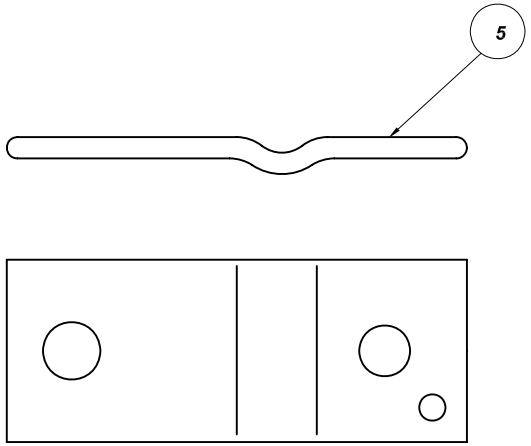

No	Revision notes	Date/Sig	No	Revision notes	Date/Sig	No	Revision notes	Date/Sig

Powerserve UK Limited
SERVING ELECTRICAL UTILITIES

TO CONTACT US
TEL: +44(0)1279-418630
FAX: +44(0)1279-210097
WEB: www.powerserveuk.com
EMAIL: info@powerserveuk.com

Scale NTS | Drawn ACS | Checked AJT | Approved AJT | Date 01/03/10

PATTERN FIXED AND CONTACTS FOR TYPE OD11 SWITCHGEAR

RE No P340927 REV 0

Sheet No

TO CONTACT US - TEL: +44(0)1279-418630 WEB: www.powerserveuk.com EMAIL: info@powerserveuk.com

All information contained in this document is confidential and the copyright reserved

Used on dwg MANUAL

P340928

Quantity D	Quantity C	Quantity B	Quantity A	No	Description	Detail No		OEM Part No
				1	FIXED CONTACT	P340067/A		
				2	REFURBISHED ISOLATOR HEAD	P340071/AR		

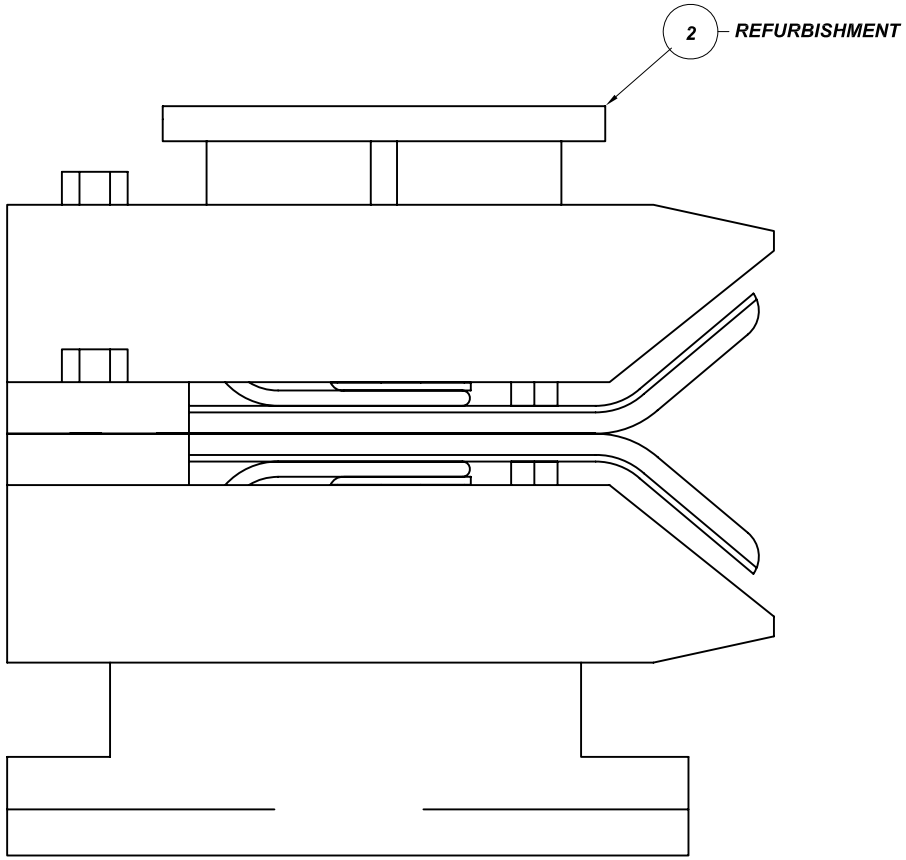

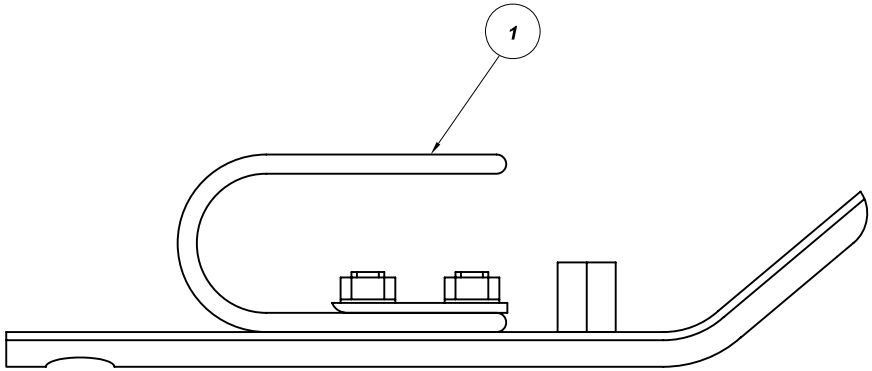

No	Revision notes	Date/Sig	No	Revision notes	Date/Sig	No	Revision notes	Date/Sig

Powerserve UK Limited
SERVING ELECTRICAL UTILITIES

TO CONTACT US
TEL: +44(0)1279-418630
FAX: +44(0)1279-210097
WEB: www.powerserveuk.com
EMAIL: info@powerserveuk.com

PATTERN CONTACTS FOR REFURBISHMENT OF GEC TYPE GD2D ISOLATOR HEADS

Scale NTS | Drawn ACS | Checked AJT | Approved AJT | Date 09/03/10

RE No | Sheet No | P340928 | REV 0

Form No 3-7.3.6-A3 Rev B

TO CONTACT US - TEL: +44(0)1279-418630 WEB: www.powerserveuk.com EMAIL: info@powerserveuk.com

All information contained in this document is confidential and the copyright reserved

Used on dwg MANUAL

P340929

Quantity D	Quantity C	Quantity B	Quantity A	No	Description	Detail No		OEM Part No
				1	FIXED CONTACT FINGER	P340066/B	PLUS STUD	
				2	FLEX CONNECTION SUPPORT	P340042/3		
				3	FLEX CONNECTION	P340042/4		

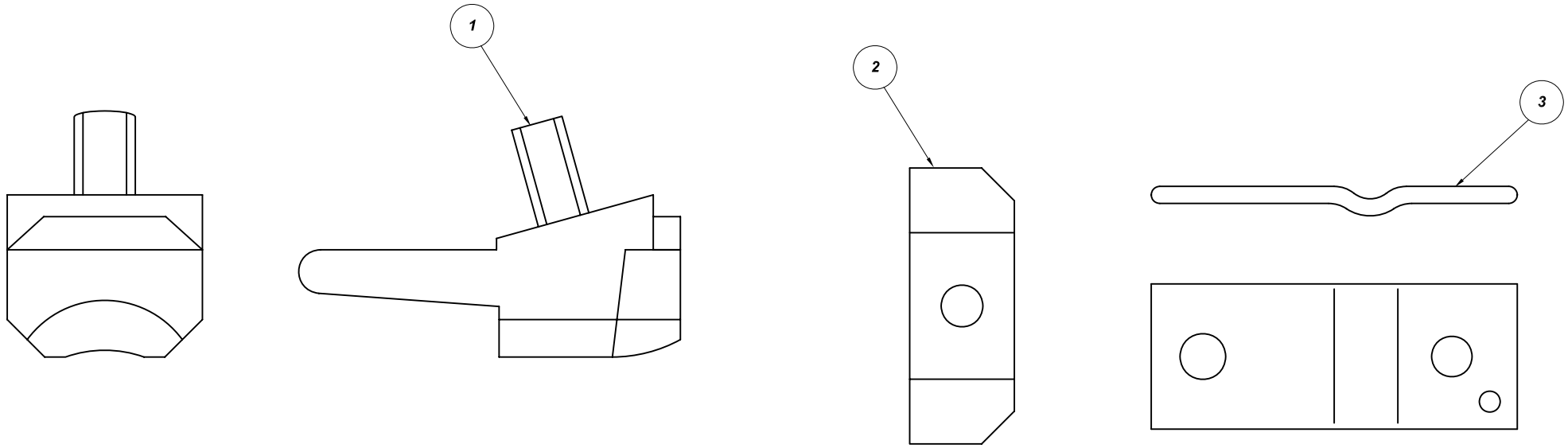

No	Revision notes	Date/Sig	No	Revision notes	Date/Sig	No	Revision notes	Date/Sig

Powerserve UK Limited
SERVING ELECTRICAL UTILITIES

TO CONTACT US
TEL: +44(0)1279-418630
FAX: +44(0)1279-210097
WEB: www.powerserveuk.com
EMAIL: info@powerserveuk.com

Scale NTS | Drawn ACS | Checked AJT | Approved AJT | Date 09/03/10

PATTERN FIXED FINGER FOR GEC TYPE KB SWITCHGEAR

RE No P340929 REV 0

Sheet No

TO CONTACT US - TEL: +44(0)1279-418630 WEB: www.powerserveuk.com EMAIL: info@powerserveuk.com

All information contained in this document is confidential and the copyright reserved

Used on dwg MANUAL

P340930

Quantity D	Quantity C	Quantity B	Quantity A	No	Description	Detail No		OEM Part No
				1	FIXED CONTACT (EXC BASE)	P340073/A		
				2	MOVING CONTACT	P340070/1		

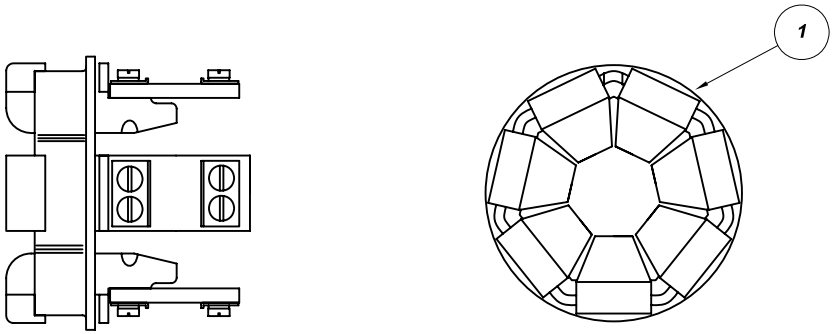

NOTE - NOT ALL FINGERS SHOWN FOR CLARITY

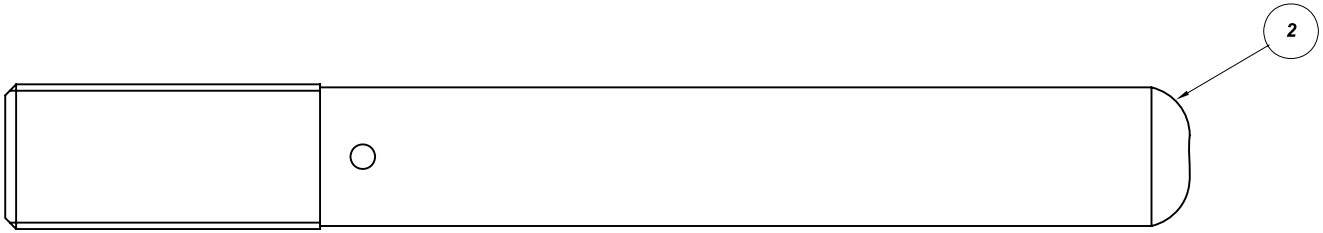

No	Revision notes	Date/Sig	No	Revision notes	Date/Sig	No	Revision notes	Date/Sig

Powerserve UK Limited
SERVING ELECTRICAL UTILITIES

TO CONTACT US
TEL: +44(0)1279-418630
FAX: +44(0)1279-210097
WEB: www.powerserveuk.com
EMAIL: info@powerserveuk.com

PATTERN FIXED AND MOVING CONTACTS FOR GEC TYPE VLP9 SWITCHGEAR

Scale NTS | Drawn ACS | Checked AJT | Approved AJT | Date 09/03/10

RE No P340930 REV 0

Sheet No

TO CONTACT US - TEL: +44(0)1279-418630 WEB: www.powerserveuk.com EMAIL: info@powerserveuk.com

All information contained in this document is confidential and the copyright reserved

Used on dwg MANUAL

P379900

Quantity D	Quantity C	Quantity B	Quantity A	No	Description	Detail No		OEM Part No
				1	CONTACT	P379001/1		
				2	CONTACT	P379001/A		
				3	CONTACT - TIPPED	P379001/B		

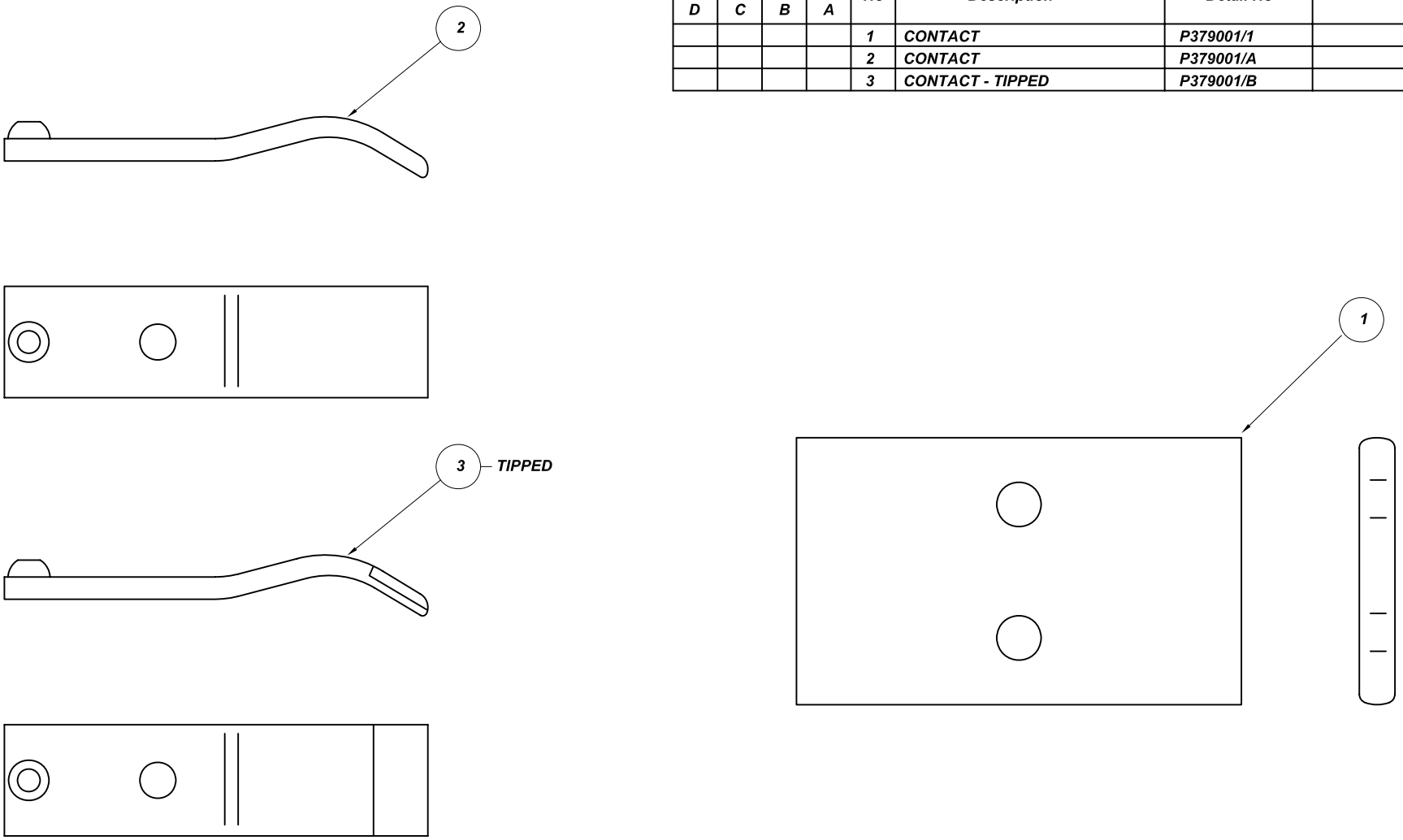

No	Revision notes	Date/Sig	No	Revision notes	Date/Sig	No	Revision notes	Date/Sig

Powerserve UK Limited
SERVING ELECTRICAL UTILITIES

TO CONTACT US
TEL: +44(0)1279-418630
FAX: +44(0)1279-210097
WEB: www.powerserveuk.com
EMAIL: info@powerserveuk.com

Scale NTS | Drawn ACS | Checked AJT | Approved AJT | Date 18/09/02

PATTERN FIXED AND MOVING CONTACTS FOR HACKBRIDGE TYPE XCO33 TAPCHANGER

RE No P379900 REV 0

Sheet No

TO CONTACT US - TEL: +44(0)1279-418630 WEB: www.powerserveuk.com EMAIL: info@powerserveuk.com

All information contained in this document is confidential and the copyright reserved

Used on dwg MANUAL

P380900

Quantity D	Quantity C	Quantity B	Quantity A	No	Description	Detail No		OEM Part No
				1	RUBBER SEAL	P900023/1		Y30113
				2	RUBBER SEAL	P900023/2		Y38110
				3	RUBBER SEAL	P900023/3		Y34565
				4	RUBBER SEAL	P900023/4		Y30236
				5	RUBBER SEAL	P900023/5		Y37590
				6	RUBBER SEAL	P380002/3		Y11054

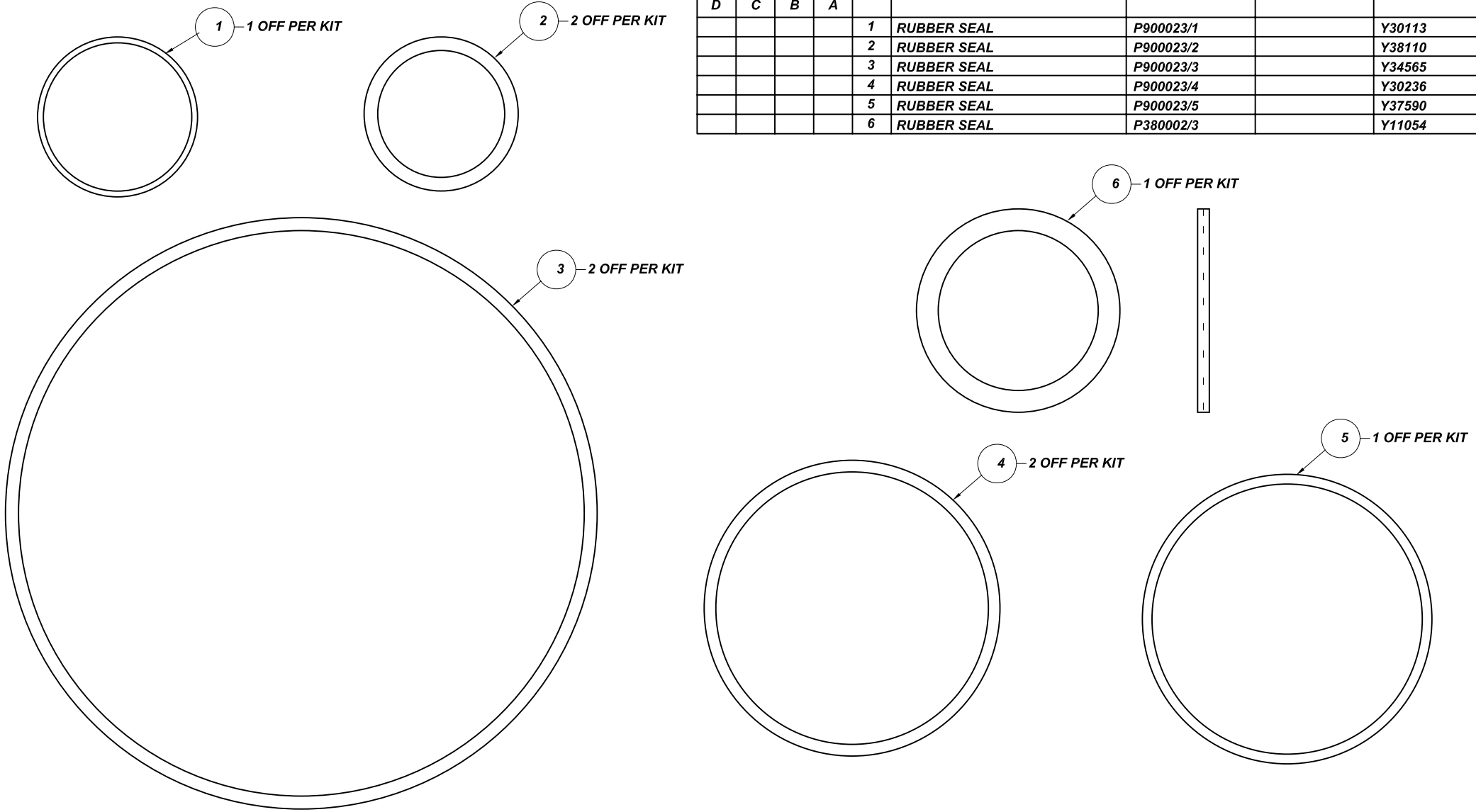

No	Revision notes	Date/Sig	No	Revision notes	Date/Sig	No	Revision notes	Date/Sig

Powerserve UK Limited
SERVING ELECTRICAL UTILITIES

TO CONTACT US
TEL: +44(0)1279-418630
FAX: +44(0)1279-210097
WEB: www.powerserveuk.com
EMAIL: info@powerserveuk.com

Scale NTS | Drawn ACS | Checked AJT | Approved AJT | Date 09/03/10

PATTERN PARTS AND RUBBER SEALS FOR HAMWORTHY COMPRESSORS

RE No | Sheet No | P380900 | REV 0

TO CONTACT US - TEL: +44(0)1279-418630 WEB: www.powerserveuk.com EMAIL: info@powerserveuk.com

All information contained in this document is confidential and the copyright reserved

Used on dwg MANUAL

P380901

Quantity D	Quantity C	Quantity B	Quantity A	No	Description	Detail No		OEM Part No
				1	GASKET	P380001/1		
				2	GASKET	P380001/2		Y08392
				3	GASKET	P380001/3		Y08562
				4	GASKET	P380001/4		Y08498
				5	GASKET	P380001/5		Y08998
				6	GASKET	P380001/6		Y08564

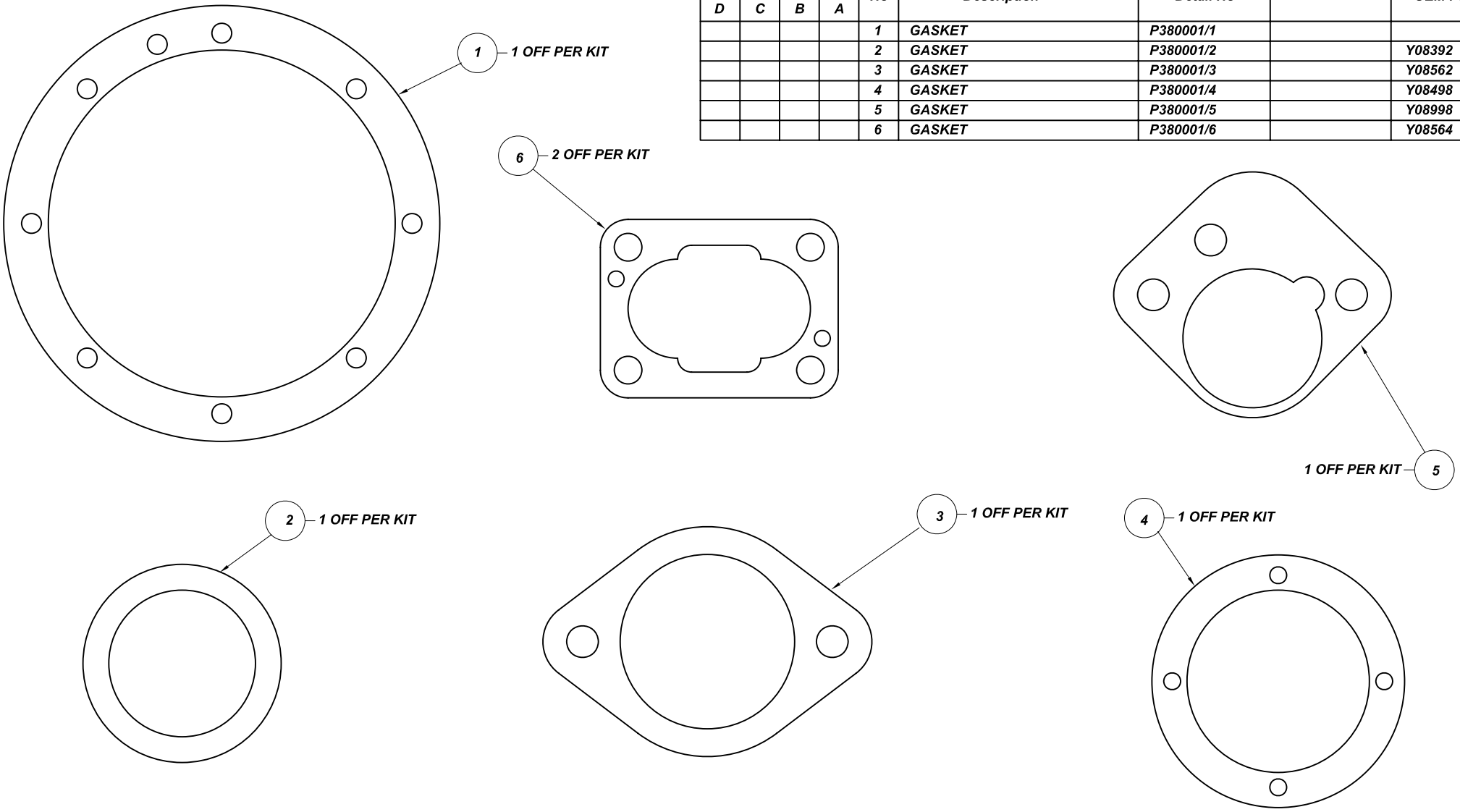

No	Revision notes	Date/Sig	No	Revision notes	Date/Sig	No	Revision notes	Date/Sig

Powerserve UK Limited
SERVING ELECTRICAL UTILITIES

TO CONTACT US
TEL: +44(0)1279-418630
FAX: +44(0)1279-210097
WEB: www.powerserveuk.com
EMAIL: info@powerserveuk.com

PATTERN PARTS AND PAPER GASKETS FOR HAMWORTHY COMPRESSORS

Scale NTS | Drawn ACS | Checked AJT | Approved AJT | Date 09/03/10

RE No | Sheet No | P380901 | REV 0

TO CONTACT US - TEL: +44(0)1279-418630 WEB: www.powerserveuk.com EMAIL: info@powerserveuk.com

All information contained in this document is confidential and the copyright reserved

Used on dwg MANUAL

P380902

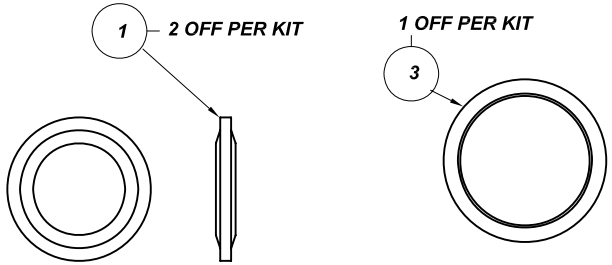

Quantity D	Quantity C	Quantity B	Quantity A	No	Description	Detail No		OEM Part No
				1	SEAL	P380002/1		Y25581
				2	DISC	P380002/2		Y30112
				3	SEAL	P380002/4		Y11742
				4	GASKET	P380003/1		14016
				5	GASKET	P380003/2		Y36404
				6	GASKET	P380003/3		
				7	GASKET	P380004/1		Y34484
				8	GASKET	P380004/2		Y25543
				9	GASKET	P380004/3		Y50089

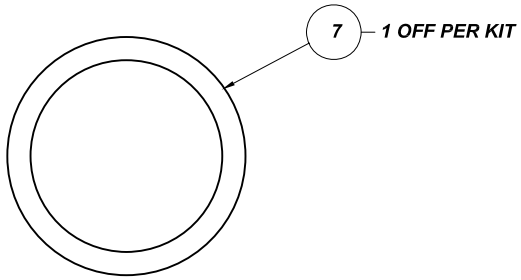

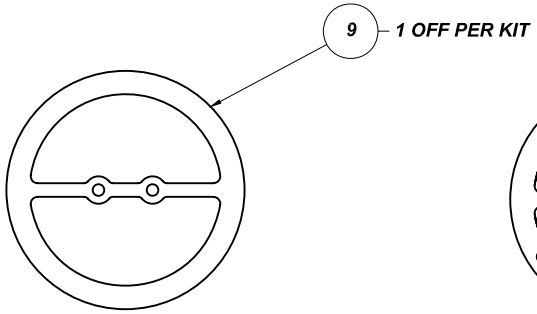

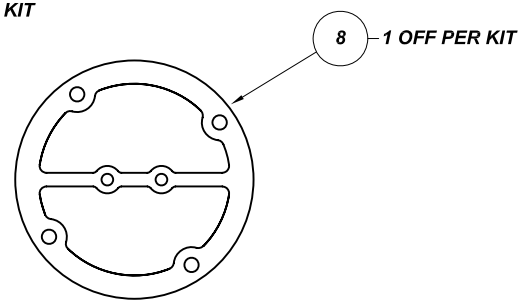

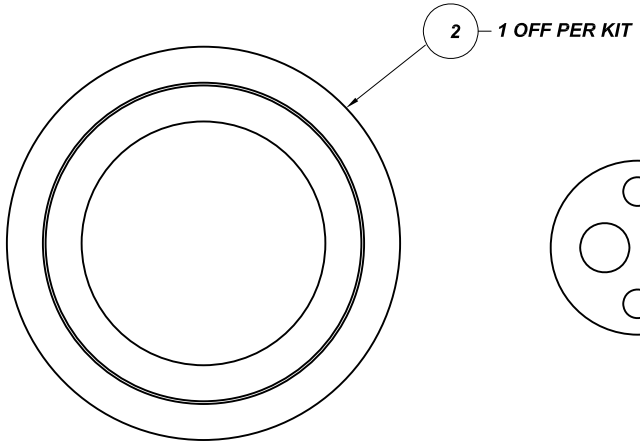

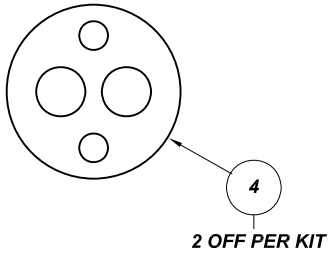

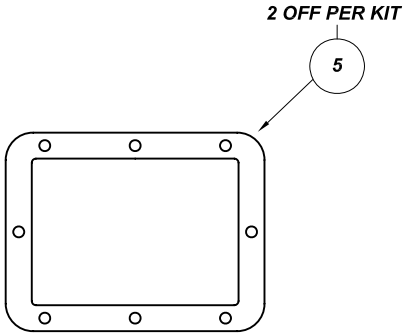

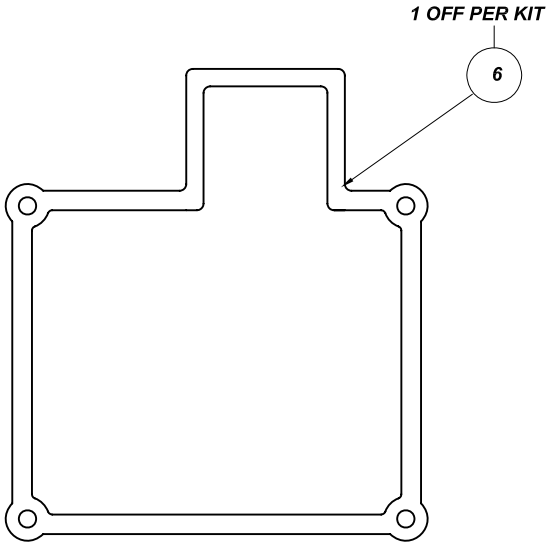

No	Revision notes	Date/Sig	No	Revision notes	Date/Sig	No	Revision notes	Date/Sig

Powerserve UK Limited
SERVING ELECTRICAL UTILITIES

TO CONTACT US
TEL: +44(0)1279-418630
FAX: +44(0)1279-210097
WEB: www.powerserveuk.com
EMAIL: info@powerserveuk.com

PATTERN PARTS AND GASKETS & SEALS FOR HAMWORTHY COMPRESSORS

Scale NTS | Drawn ACS | Checked AJT | Approved AJT | Date 09/03/10

RE No | Sheet No | P380902 | REV 0

TO CONTACT US - TEL: +44(0)1279-418630 WEB: www.powerserveuk.com EMAIL: info@powerserveuk.com

All information contained in this document is confidential and the copyright reserved

Used on dwg MANUAL

P380903

Quantity D	Quantity C	Quantity B	Quantity A	No	Description	Detail No		OEM Part No
				1	ONE WAY VALVE	P380006/A		
				2	ONE WAY VALVE	P380005/A		
				3	ONE WAY VALVE	P380009/A		
				4	ONE WAY VALVE	P380010/A		
				5	ONE WAY VALVE	P380011/A		

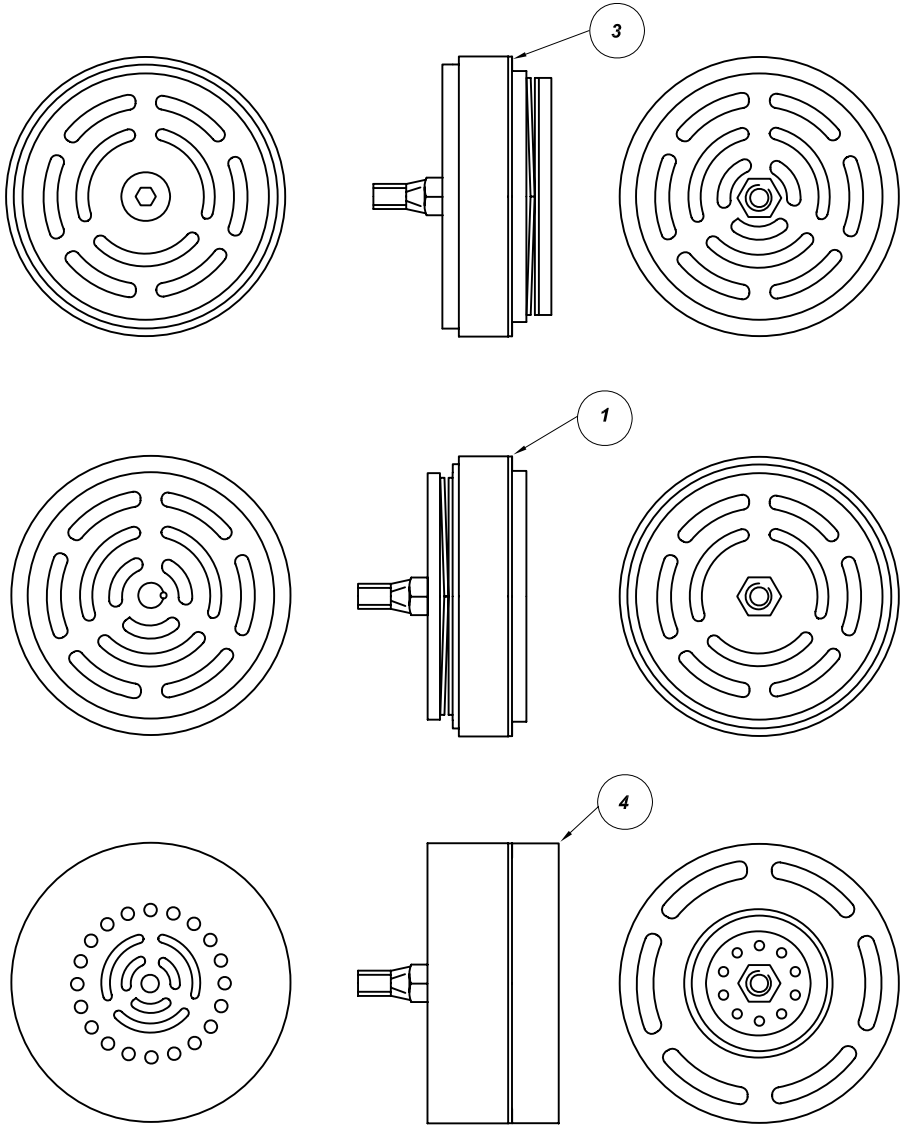

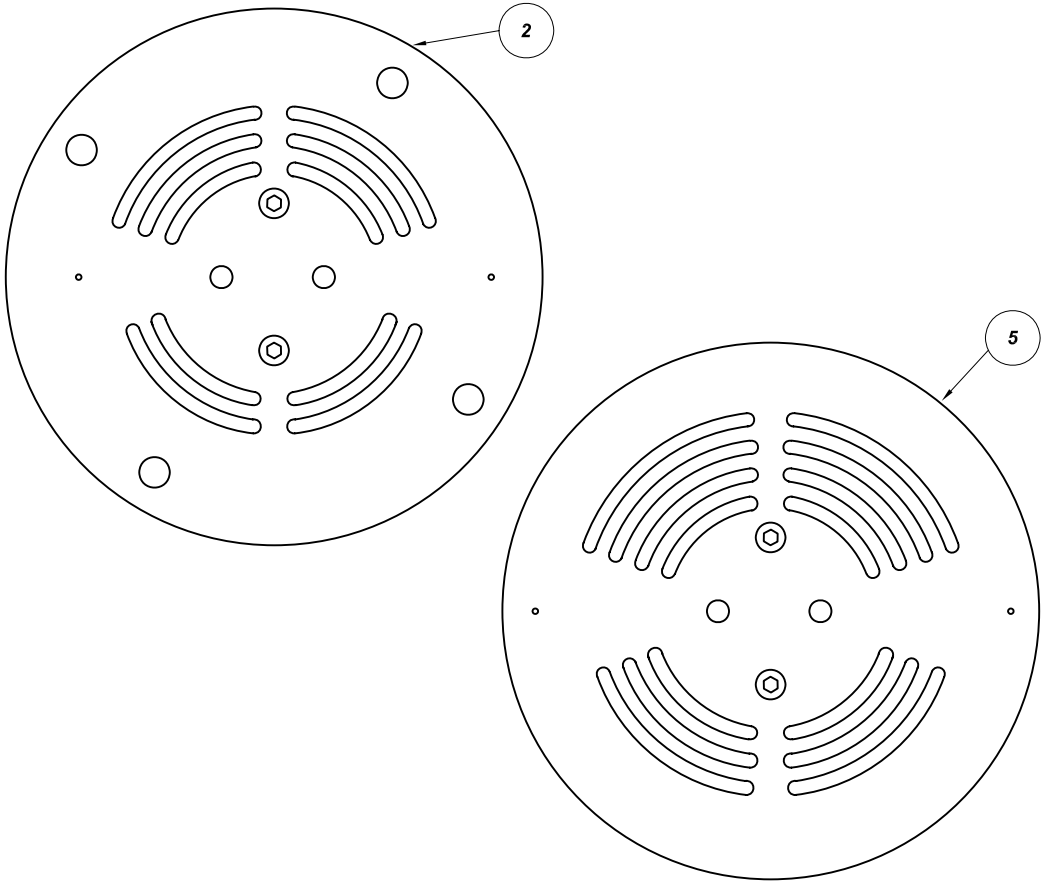

No	Revision notes	Date/Sig	No	Revision notes	Date/Sig	No	Revision notes	Date/Sig

Powerserve UK Limited
SERVING ELECTRICAL UTILITIES

TO CONTACT US
TEL: +44(0)1279-418630
FAX: +44(0)1279-210097
WEB: www.powerserveuk.com
EMAIL: info@powerserveuk.com

HAMWORTHY ONE WAY VALVES - SECONDARY REFURBISHED & CLEANING ONLY

Scale NTS | Drawn ACS | Checked AJT | Approved AJT | Date 09/03/10

RE No | Sheet No | P380903 | REV 0

TO CONTACT US - TEL: +44(0)1279-418630 WEB: www.powerserveuk.com EMAIL: info@powerserveuk.com

All information contained in this document is confidential and the copyright reserved

Used on dwg MANUAL

P440900

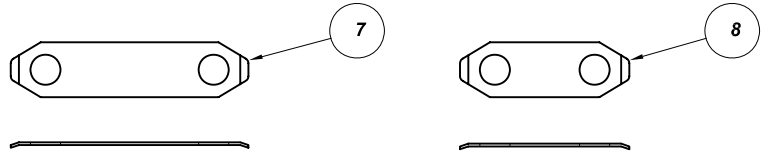

Quantity D	Quantity C	Quantity B	Quantity A	No	Description	Detail No		OEM Part No
				1	MOVABLE AUXILIARY CONTACT	P440001/1		
				2	MOVABLE AUXILIARY CONTACT	P440001/2		
				3	MAIN ARCING CONTACT	P440003/1		
				4	MAIN ARCING CONTACT	P440003/2		
				5	FIXED MAIN CONTACT	P440004/1		
				6	FIXED MAIN CONTACT	P440004/2		
				7	LOCKING TAB	P530013/1		
				8	LOCKING TAB	P530013/2		

MOVABLE AUXILIARY CONTACT FOR C250

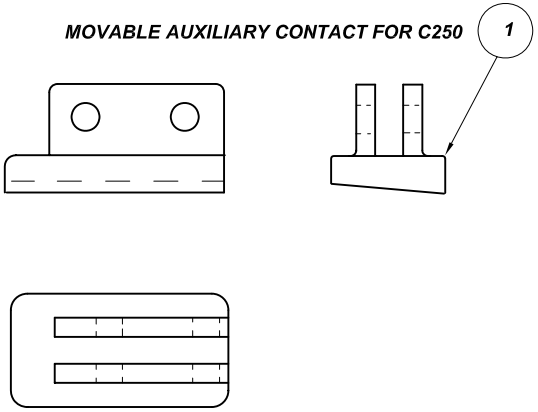

MOVABLE MAIN ARCING CONTACT FOR C250

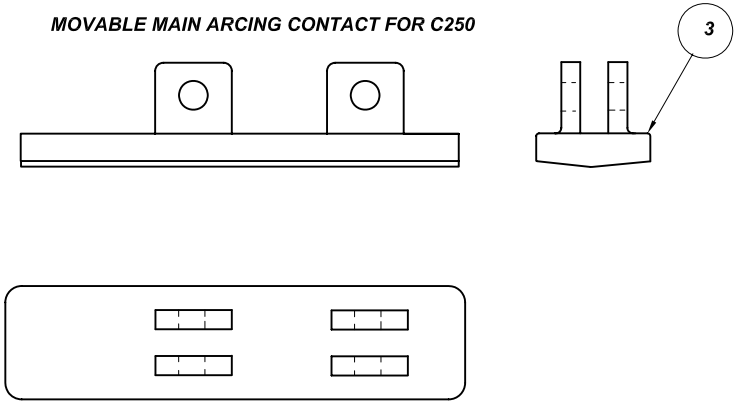

FIXED MAIN CONTACT FOR C250

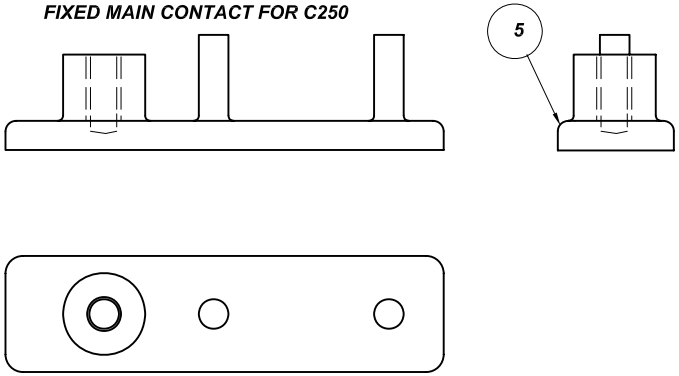

MOVABLE AUXILIARY CONTACT FOR C350

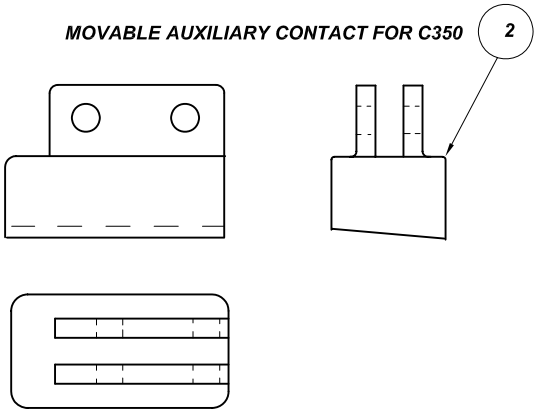

MOVABLE MAIN ARCING CONTACT FOR C350

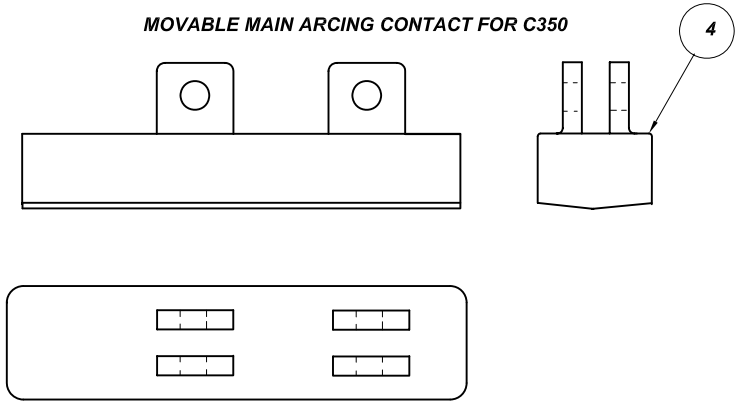

FIXED MAIN CONTACT FOR C350

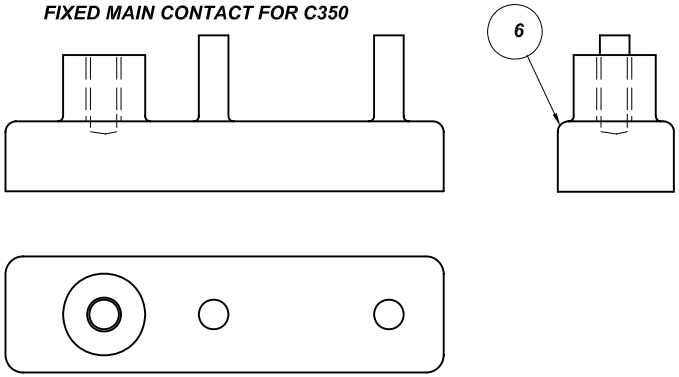

No	Revision notes	Date/Sig	No	Revision notes	Date/Sig	No	Revision notes	Date/Sig

Powerserve UK Limited
SERVING ELECTRICAL UTILITIES

TO CONTACT US
TEL: +44(0)1279-418630
FAX: +44(0)1279-210097
WEB: www.powerserveuk.com
EMAIL: info@powerserveuk.com

PATTERN CONTACTS
JANSEN TYPE
TAPCHANGERS

Scale NTS | Drawn ACS | Checked AJT | Approved AJT | Date 09/03/10

RE No | Sheet No | P440900 | REV 0

TO CONTACT US - TEL: +44(0)1279-418630 WEB: www.powerserveuk.com EMAIL: info@powerserveuk.com

All information contained in this document is confidential and the copyright reserved

Used on dwg MANUAL

P443902

Quantity D	Quantity C	Quantity B	Quantity A	No	Description	Detail No		OEM Part No
					MOVING CONTACT	P443001/1		

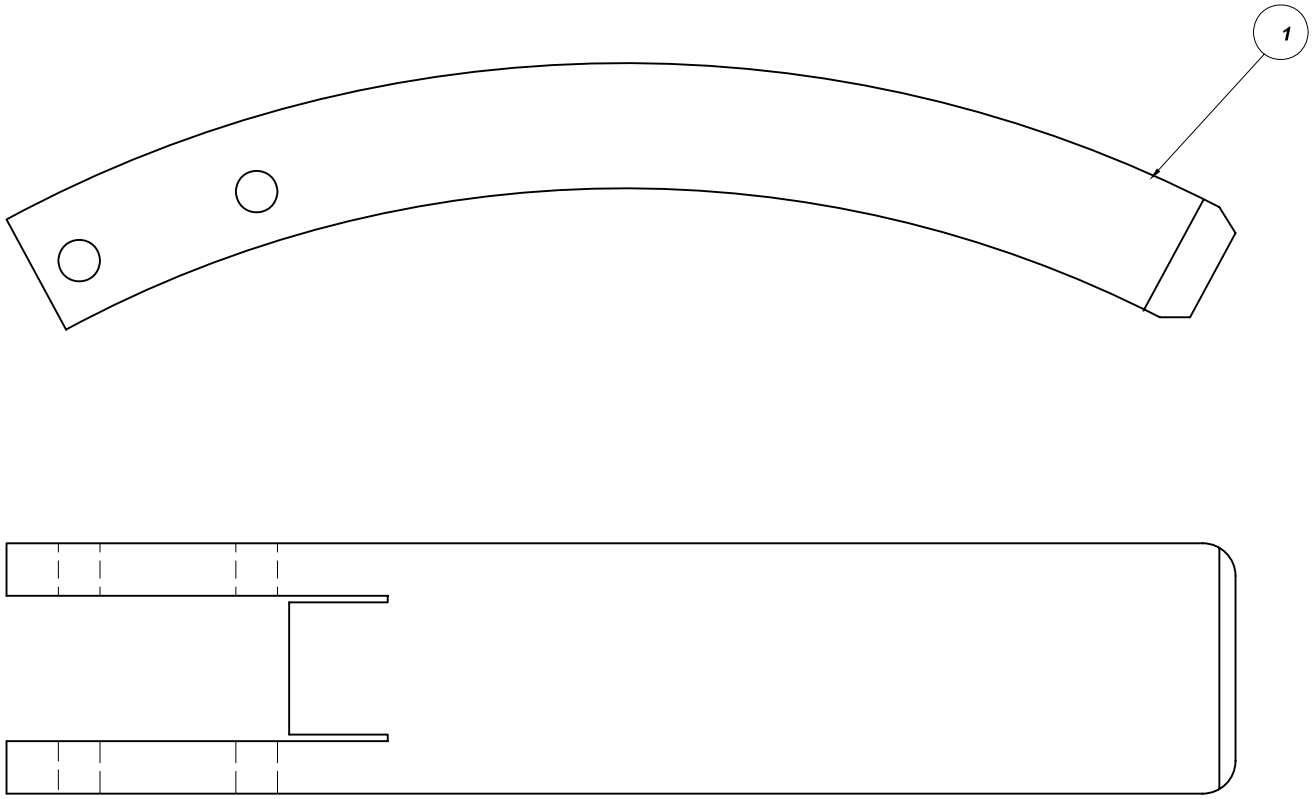

No	Revision notes	Date/Sig	No	Revision notes	Date/Sig	No	Revision notes	Date/Sig

Powerserve UK Limited
SERVING ELECTRICAL UTILITIES

Scale NTS Drawn ACS Checked AJT Approved AJT Date 01/03/10

TO CONTACT US
TEL: +44(0)1279-418630
FAX: +44(0)1279-210097
WEB: www.powerserveuk.com
EMAIL: info@powerserveuk.com

PATTERN MOVING CONTACT FOR JOHNSON & PHILLIPS 11Kv 400 AMP TYPE M660 BREAKER

RE No P443902 REV 0

Sheet No

TO CONTACT US - TEL: +44(0)1279-418630 WEB: www.powerserveuk.com EMAIL: info@powerserveuk.com

All information contained in this document is confidential and the copyright reserved

Used on dwg MANUAL

P480903

Quantity D	Quantity C	Quantity B	Quantity A	No	Description	Detail No		OEM Part No
				1	FRONT INSPECTION GASKET	P480001/1		

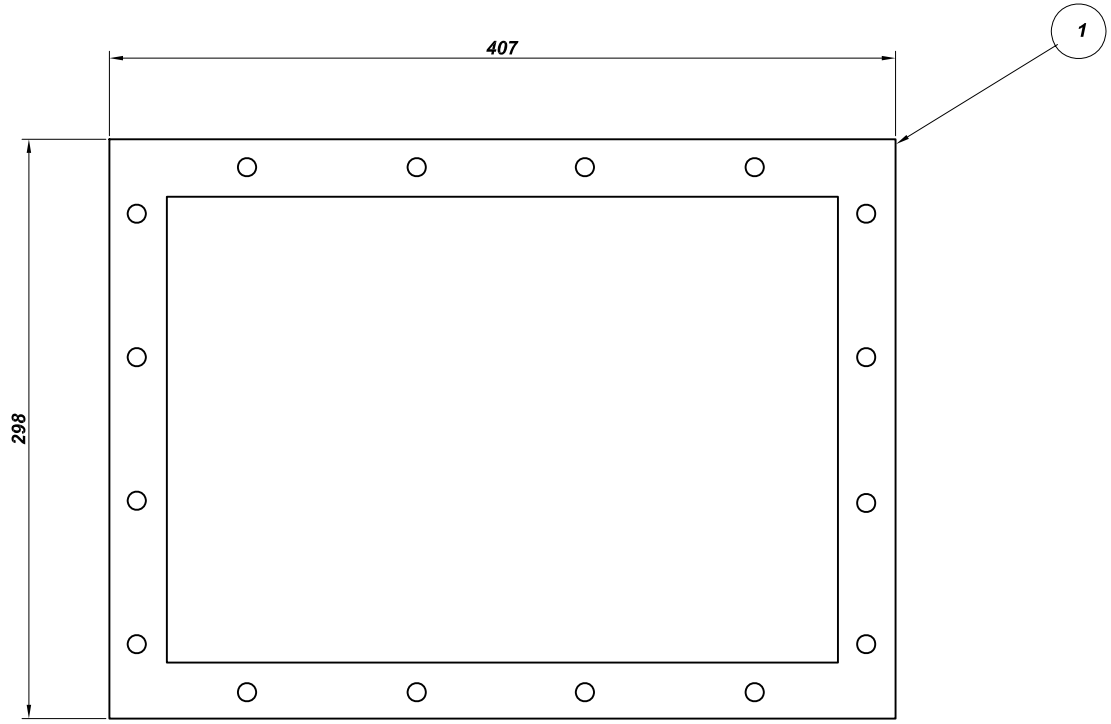

No	Revision notes	Date/Sig	No	Revision notes	Date/Sig	No	Revision notes	Date/Sig

Powerserve UK Limited
SERVING ELECTRICAL UTILITIES

Scale NTS Drawn ACS Checked AJT Approved AJT Date 09/03/10

TO CONTACT US
TEL: +44(0)1279-418630
FAX: +44(0)1279-210097
WEB: www.powerserveuk.com
EMAIL: info@powerserveuk.com

PATTERN GASKET FOR LONG & CRWAFORD TYPE T3GF3 SWITCHGEAR

RE No P480903 REV 0

Sheet No

TO CONTACT US - TEL: +44(0)1279-418630 WEB: www.powerserveuk.com EMAIL: info@powerserveuk.com

All information contained in this document is confidential and the copyright reserved

Used on dwg MANUAL

P480904

Quantity D	Quantity C	Quantity B	Quantity A	No	Description	Detail No		OEM Part No
				1	TEXT COVER GASKET	P480002/1		

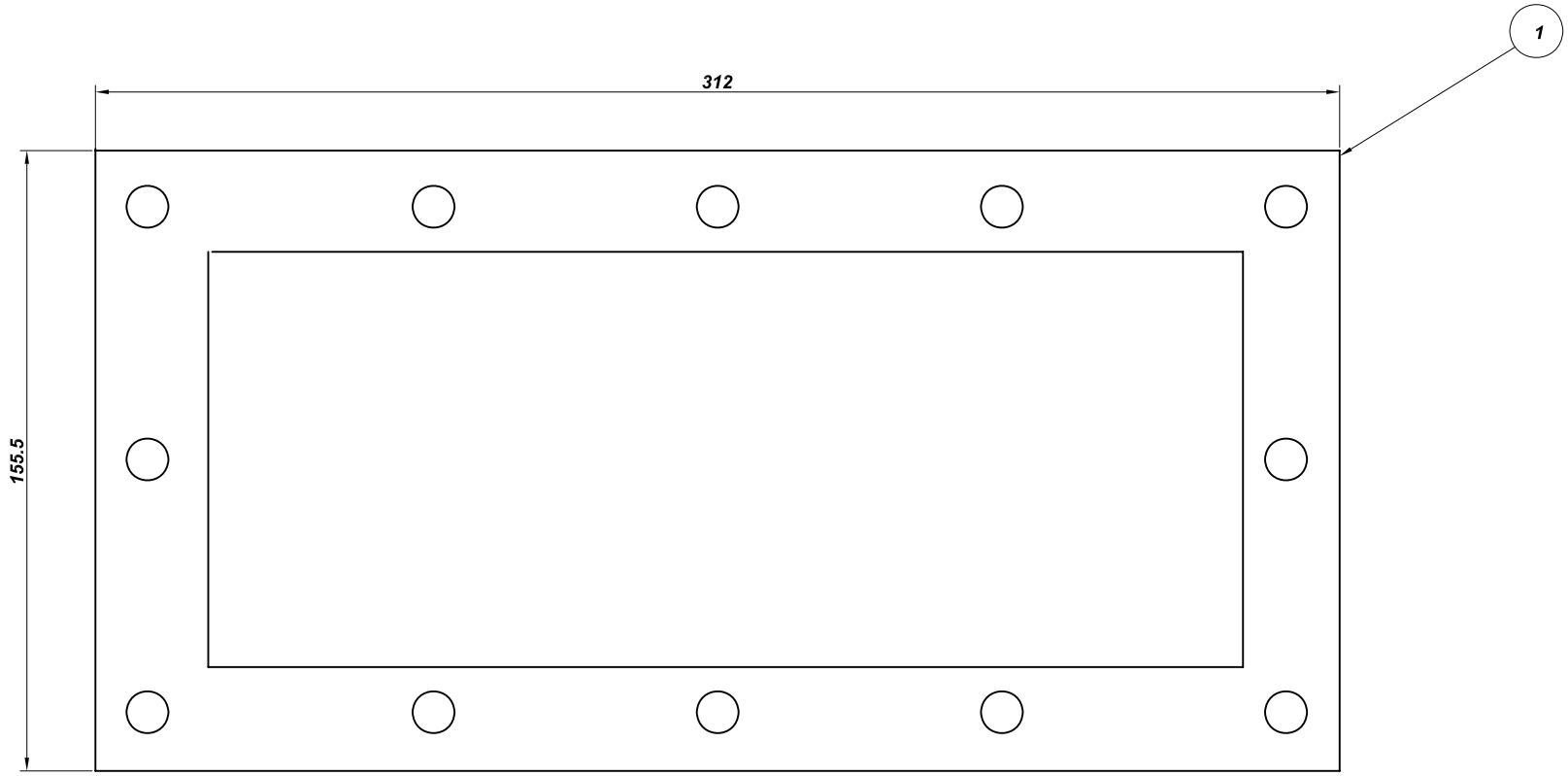

No	Revision notes	Date/Sig	No	Revision notes	Date/Sig	No	Revision notes	Date/Sig

Powerserve UK Limited
SERVING ELECTRICAL UTILITIES

TO CONTACT US
TEL: +44(0)1279-418630
FAX: +44(0)1279-210097
WEB: www.powerserveuk.com
EMAIL: info@powerserveuk.com

Scale NTS | Drawn ACS | Checked AJT | Approved AJT | Date 09/03/10

PATTERN GASKET FOR LONG & CRAWFORD TYPE ETV2 SWITCHGEAR

RE No P480904 REV 0

Sheet No

TO CONTACT US - TEL: +44(0)1279-418630 WEB: www.powerserveuk.com EMAIL: info@powerserveuk.com

All information contained in this document is confidential and the copyright reserved

Used on dwg MANUAL

P520902

Quantity D	Quantity C	Quantity B	Quantity A	No	Description	Detail No		OEM Part No
			1	1	Fixed Contact Fingers 1xLH 1xRH	P520001/A	SILVER PLATED	
		1	1	2	Moving Contact	P520002/A	NATURAL FINISH	
		1		3	Fixed Contact Fingers 1xLH 1xRH	P520001/B	NATURAL FINISH	
				4	ISOLATING CLUSTER	P520006/A		

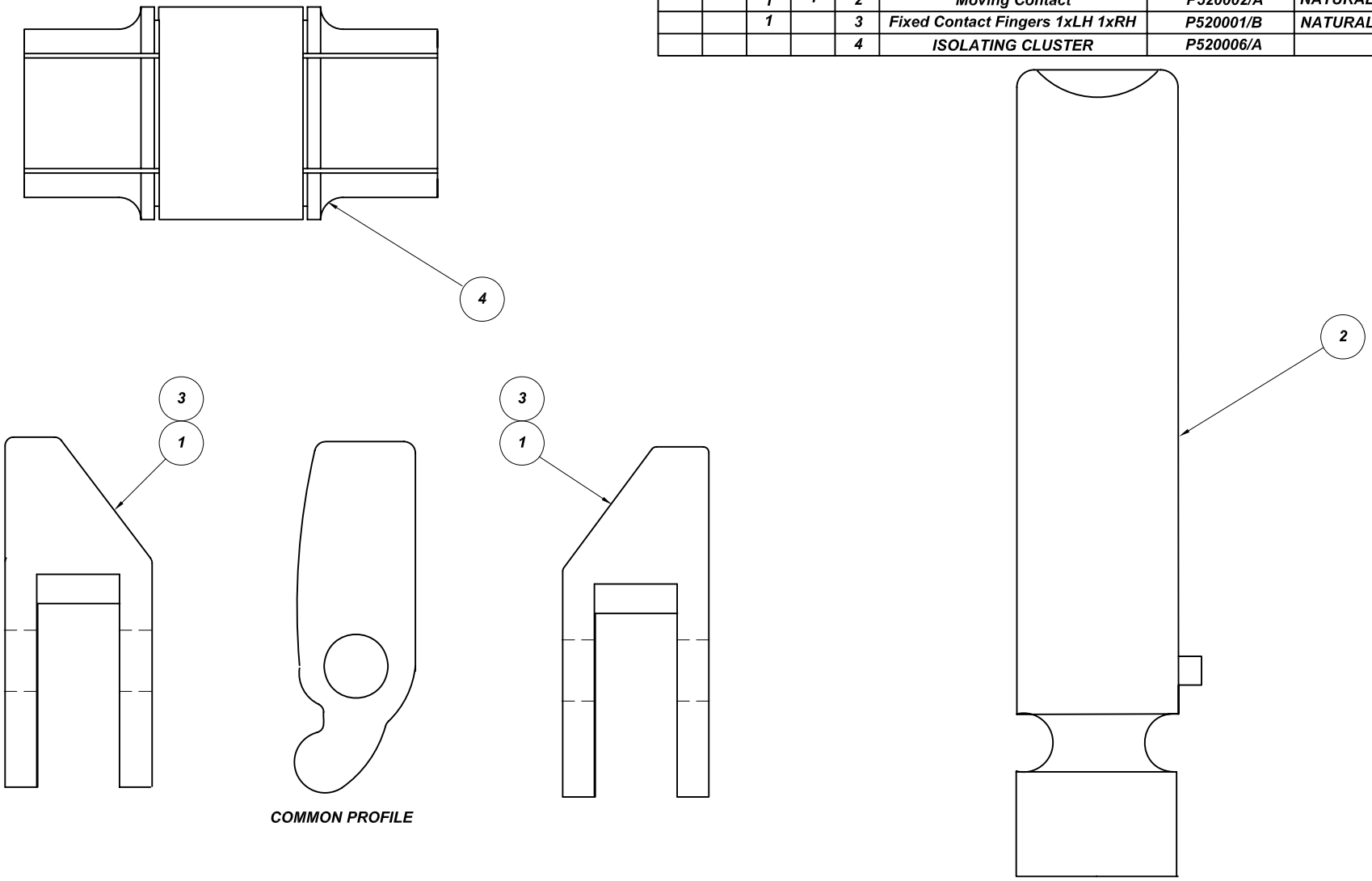

No	Revision notes	Date/Sig	No	Revision notes	Date/Sig	No	Revision notes	Date/Sig

Powerserve UK Limited
SERVING ELECTRICAL UTILITIES

Scale NTS | Drawn ACS | Checked AJT | Approved AJT | Date 02/03/10

TO CONTACT US
TEL: +44(0)1279-418630
FAX: +44(0)1279-210097
WEB: www.powerserveuk.com
EMAIL: info@powerserveuk.com

PATTER FIXED AND MOVING CONTACTS FOR METROPOLITAN VICKERS TYPE V1R/H1R SWGR

RE No P520902 REV 0

Sheet No

TO CONTACT US - TEL: +44(0)1279-418630 WEB: www.powerserveuk.com EMAIL: info@powerserveuk.com

All information contained in this document is confidential and the copyright reserved

Used on dwg MANUAL

P520905

Quantity D	Quantity C	Quantity B	Quantity A	No	Description	Detail No		OEM Part No
			12	1	FIXED CONTACT	P520003/1		
			6	2	MAIN MOVING CONTACT	P520003/A		
			6	3	FIXED ARC CONTACT	P520004/1		
			6	4	MOVING ARC CONTACT	P520004/A		

GROUP A - FULL SET OF FIXED AND MOVING CONTACTS

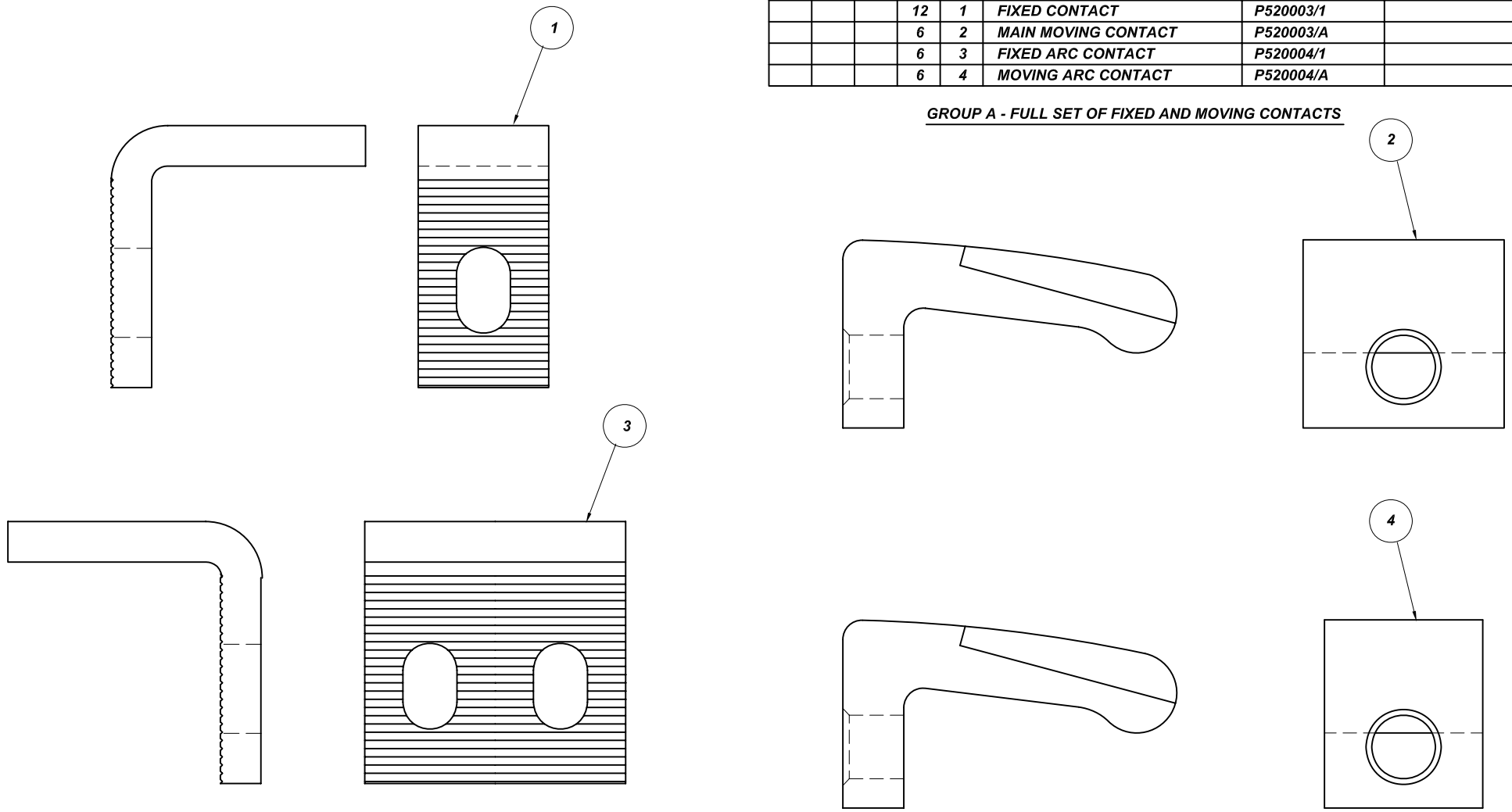

No	Revision notes	Date/Sig	No	Revision notes	Date/Sig	No	Revision notes	Date/Sig

Powerserve UK Limited
SERVING ELECTRICAL UTILITIES

TO CONTACT US
TEL: +44(0)1279-418630
FAX: +44(0)1279-210097
WEB: www.powerserveuk.com
EMAIL: info@powerserveuk.com

PATTERN FIXED AND MOVING CONTACTS FOR MET VICK TYPE LCT TAPCHANGERS

Scale NTS | Drawn ACS | Checked AJT | Approved AJT | Date 02/03/10

RE No | Sheet No | P520905 | REV 0

TO CONTACT US - TEL: +44(0)1279-418630 WEB: www.powerserveuk.com EMAIL: info@powerserveuk.com

All information contained in this document is confidential and the copyright reserved

Used on dwg MANUAL

P520906

Quantity D	Quantity C	Quantity B	Quantity A	No	Description	Detail No		OEM Part No
				1	CONTACT TIP	P520005/1		
				2	RIVET	P520005/2		

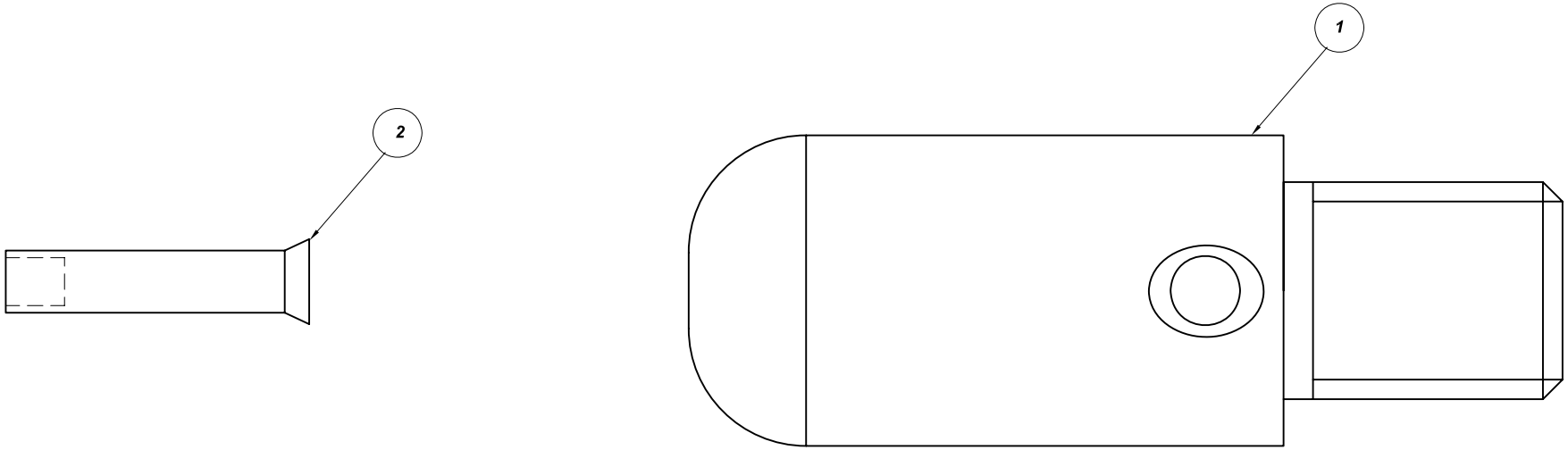

No	Revision notes	Date/Sig	No	Revision notes	Date/Sig	No	Revision notes	Date/Sig

Powerserve UK Limited
SERVING ELECTRICAL UTILITIES

TO CONTACT US
TEL: +44(0)1279-418630
FAX: +44(0)1279-210097
WEB: www.powerserveuk.com
EMAIL: info@powerserveuk.com

PATTERN CONTACT TIP AND RIVET FOR MET VICK TYPA SB28/X SWITCHGEAR

Scale NTS | Drawn ACS | Checked AJT | Approved AJT | Date 02/03/10

RE No | Sheet No | P520906 | REV 0

Form No 3-7.3.6-A3 Rev B

TO CONTACT US - TEL: +44(0)1279-418630 WEB: www.powerserveuk.com EMAIL: info@powerserveuk.com

All information contained in this document is confidential and the copyright reserved

Used on dwg MANUAL

P558901

Quantity D	Quantity C	Quantity B	Quantity A	No	Description	Detail No		OEM Part No

FIG 1

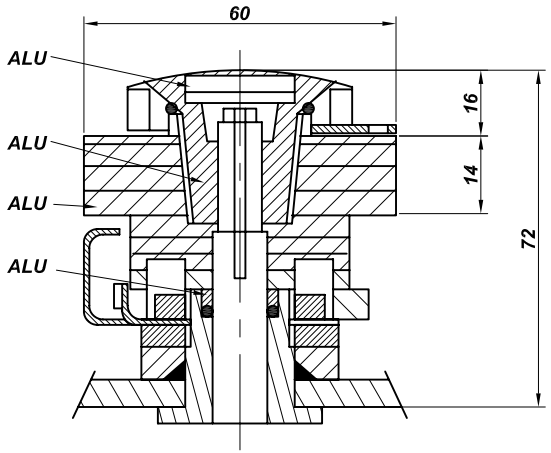

FIG 2

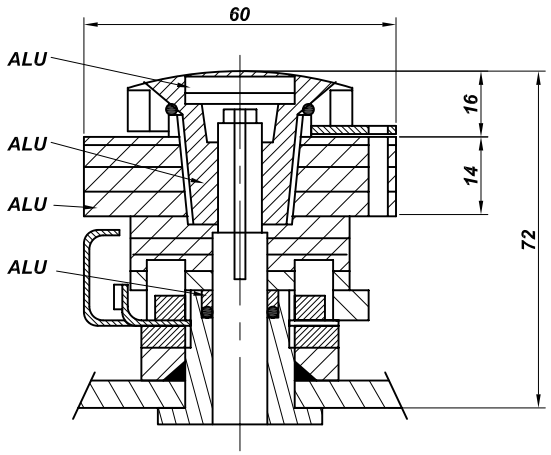

FIG 3

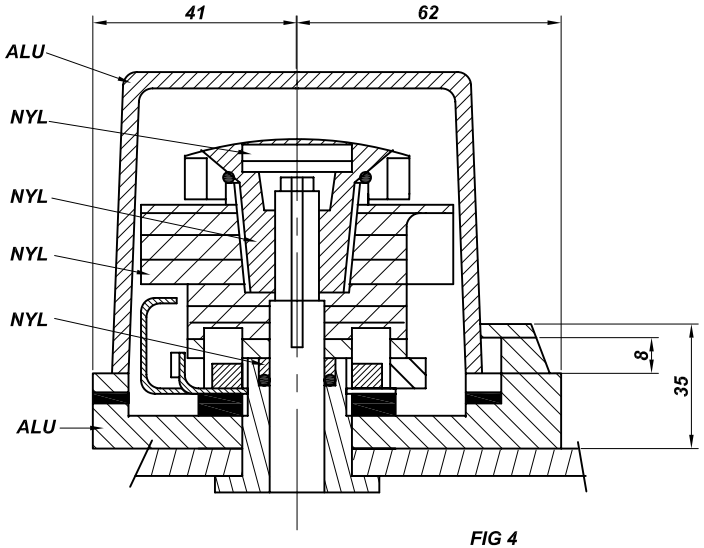

FIG 4

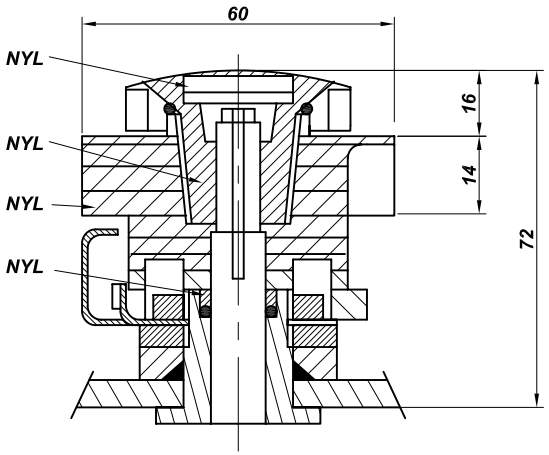

NOTES

VOLTAGE (Kv) : 20 - 30
CURRENT (A) : 10 - 30 - 63
POSITIONS : 2 - 7
POWER (KvA) : 630 MAX
CONNECTIONS : DELTA, STAR, SERIES PARALLEL OR COMMON-OUT PER PHASE

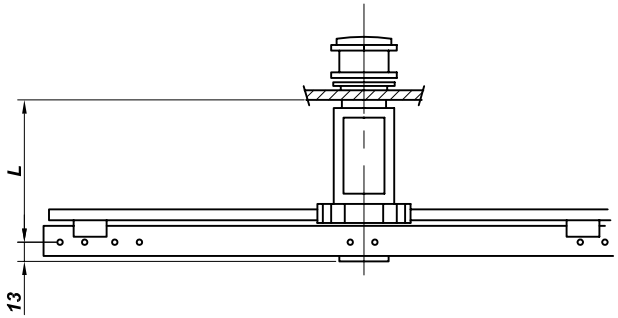

L= 50, 70, 100 OR 130

No	Revision notes	Date/Sig	No	Revision notes	Date/Sig	No	Revision notes	Date/Sig

Powerserve UK Limited
SERVING ELECTRICAL UTILITIES

TO CONTACT US
TEL: +44(0)1279-418630
FAX: +44(0)1279-210097
WEB: www.powerserveuk.com
EMAIL: info@powerserveuk.com

OFF-CIRCUIT TAP SELECTOR

Scale NTS | Drawn ACS | Checked AJT | Approved AJT | Date 09/03/10

RE No | Sheet No | P558901 | REV 0

Form No 3-7.3.6-A3 Rev B

TO CONTACT US - TEL: +44(0)1279-418630 WEB: www.powerserveuk.com EMAIL: info@powerserveuk.com

All information contained in this document is confidential and the copyright reserved

Used on dwg MANUAL

P558905

Quantity D	Quantity C	Quantity B	Quantity A	No	Description	Detail No		OEM Part No

FIG 1

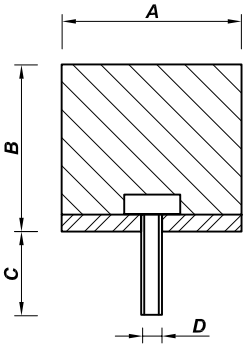

FIG 2

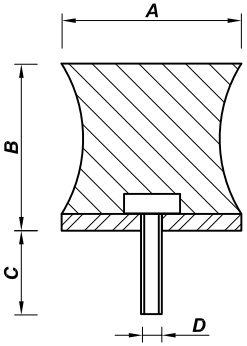

FIG 3

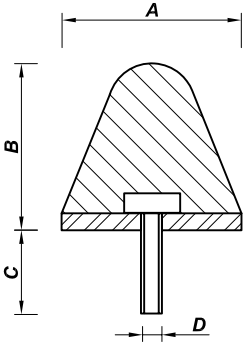

FIG 4

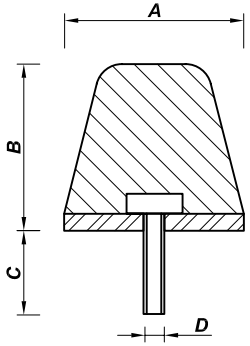

PART NUMBER	DIMENSIONS A	DIMENSIONS B	DIMENSIONS C	DIMENSIONS D	SHORE HARDNESS	FIGURE NUMBER	COMPRESSION LOAD (Kg)
P558905/1	12	15	10	5	50	fig 1	15
P558905/2	28	22	20	8	50	fig 1	60
P558905/3	40	28	30	10	50	fig 1	100
P558905/4	50	35	30	10	50	fig 1	160
P558905/5	50	25	30	10	50	fig 1	175
P558905/6	60	60	30	10	50	fig 2	150
P558905/7	60	60	30	10	50	fig 1	225
P558905/8	60	35	30	10	50	fig 1	300
P558905/9	60	25	30	10	50	fig 1	400
P558905/10	70	50	35	12	50	fig 1	300
P558905/11	80	70	45	14	50	fig 2	350
P558905/12	80	30	45	14	50	fig 1	950
P558905/13	95	76	45	16	50	fig 2	450

PART NUMBER	DIMENSIONS A	DIMENSIONS B	DIMENSIONS C	DIMENSIONS D	SHORE HARDNESS	FIGURE NUMBER	LOAD (Kg) SHOCK	LOAD (Kg) COMPRESSIVE
P558905/14	25	20	20	8	60	fig 3	100	40
P558905/15	30	30	15	6	60	fig 3	140	50
P558905/16	50	65	30	8	60	fig 3	370	90
P558905/17	70	60	35	12	60	fig 3	550	160
P558905/18	85	53	35	12	60	fig 4	1250	375
P558905/19	95	80	45	16	60	fig 3	1100	350
P558905/20	120	75	50	16	60	fig 4	4500	2000
P558905/21	220	136	80	24	60	fig 4	10000	3800

No	Revision notes	Date/Sig	No	Revision notes	Date/Sig	No	Revision notes	Date/Sig

Powerserve UK Limited
SERVING ELECTRICAL UTILITIES

TO CONTACT US
TEL: +44(0)1279-418630
FAX: +44(0)1279-210097
WEB: www.powerserveuk.com
EMAIL: info@powerserveuk.com

RUBBER BOBBIN MOUNTS

Scale NTS | Drawn ACS | Checked AJT | Approved AJT | Date 09/03/10

RE No P558905 REV 0

Sheet No

TO CONTACT US - TEL: +44(0)1279-418630 WEB: www.powerserveuk.com EMAIL: info@powerserveuk.com

All information contained in this document is confidential and the copyright reserved

Used on dwg MAUNAL

P558912

Quantity D	Quantity C	Quantity B	Quantity A	No	Description	Detail No		OEM Part No
				1	'O' RING	P558012/1		
				2	SEAL	P558012/2		

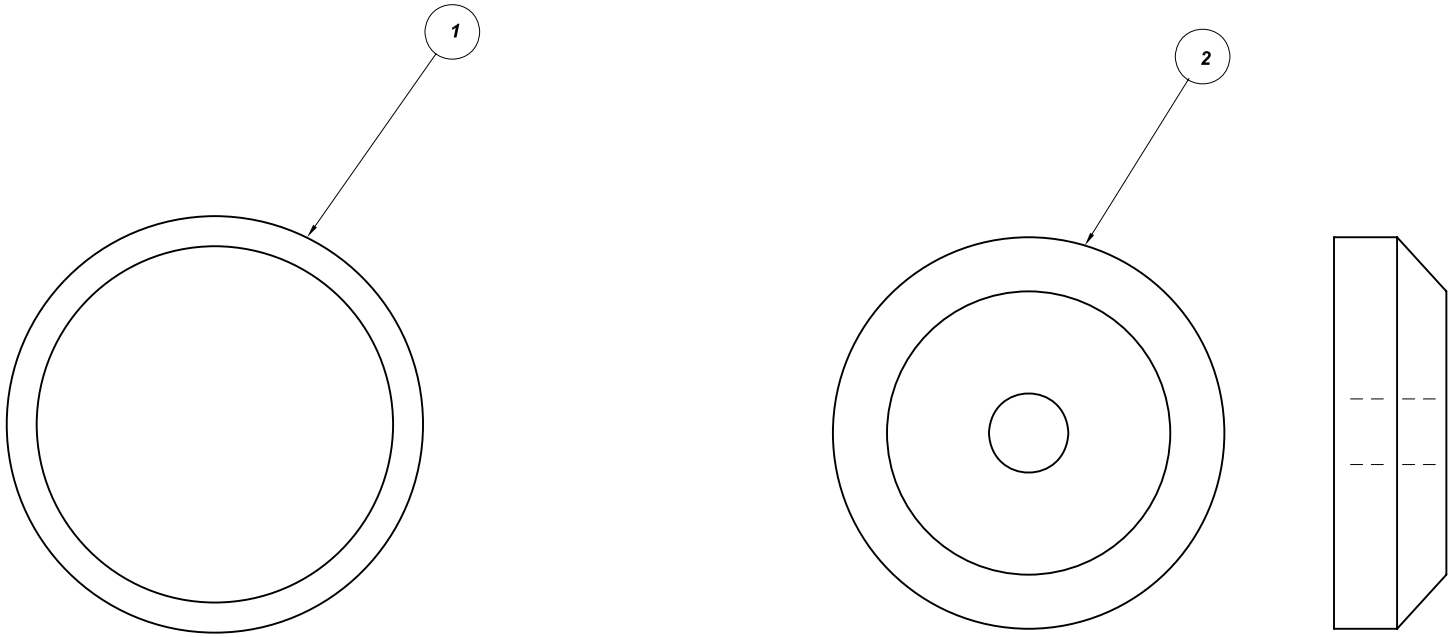

No	Revision notes	Date/Sig	No	Revision notes	Date/Sig	No	Revision notes	Date/Sig

Powerserve UK Limited
SERVING ELECTRICAL UTILITIES

Scale NTS Drawn ACS Checked AJT Approved AJT Date 09/03/10

TO CONTACT US
TEL: +44(0)1279-418630
FAX: +44(0)1279-210097
WEB: www.powerserveuk.com
EMAIL: info@powerserveuk.com

PATTERN PARTS FOR VALVE REFURBISHMENT KIT

RE No P558912 REV 0

Sheet No

A	B	C	D	E	F	G	H

TO CONTACT US - TEL: +44(0)1279-418630 WEB: www.powerserveuk.com EMAIL: info@powerserveuk.com

All information contained in this document is confidential and the copyright reserved

Used on dwg MANUAL

P558913

Quantity D	Quantity C	Quantity B	Quantity A	No	Description	Detail No		OEM Part No
				1	FIXED CONTACT ASSEMBLY	P558018/A		

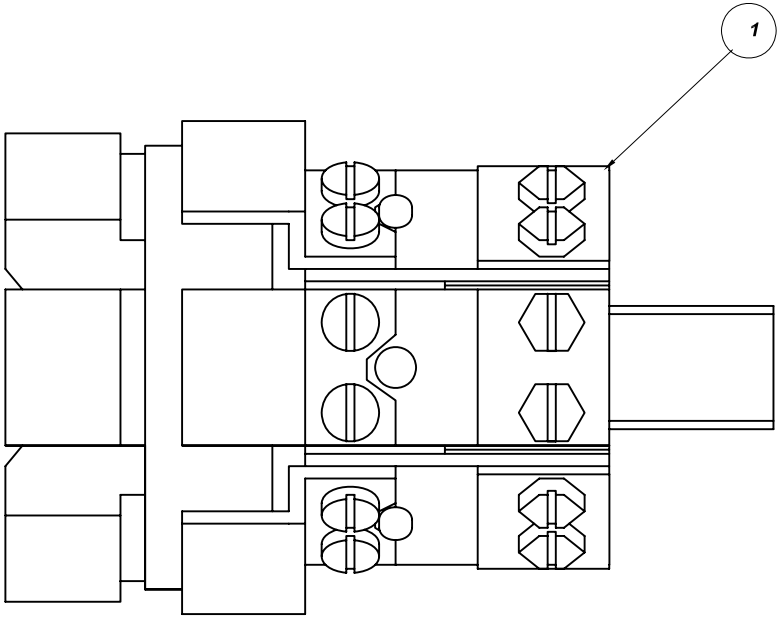

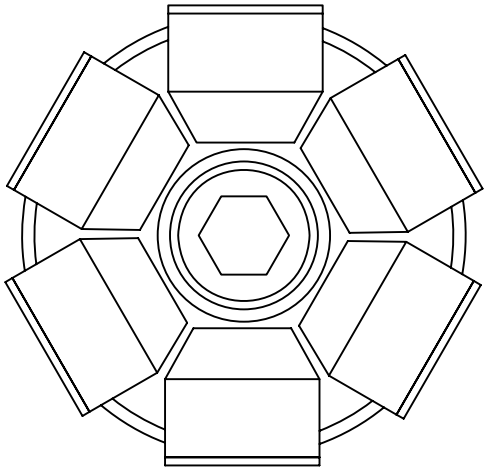

No	Revision notes	Date/Sig	No	Revision notes	Date/Sig	No	Revision notes	Date/Sig

Powerserve UK Limited
SERVING ELECTRICAL UTILITIES

TO CONTACT US
TEL: +44(0)1279-418630
FAX: +44(0)1279-210097
WEB: www.powerserveuk.com
EMAIL: info@powerserveuk.com

PATTERN PARTS FOR TYPE MTG2 FIXED CONTACT SWITCHGEAR

Scale NTS | Drawn ACS | Checked AJT | Approved AJT | Date 09/03/10

RE No | Sheet No | P558913 | REV 0

TO CONTACT US - TEL: +44(0)1279-418630 WEB: www.powerserveuk.com EMAIL: info@powerserveuk.com

All information contained in this document is confidential and the copyright reserved

Used on dwg MANUAL

P558916

CENTERS (mm)	PIPE THREADS	PIPE CONFIG	BACKGROUND COLOUR	OIL LEVEL GROOVE COLOUR	Quantity D	Quantity C	Quantity B	Quantity A	No	Description	Detail No		OEM Part No
89	METRIC	HANDED	RED	CLEAR					1	OIL LEVEL GAUGE ASSEMBLY	P558015/A		
89	METRIC	EQUAL	RED	CLEAR					2	OIL LEVEL GAUGE ASSEMBLY	P558015/B		
89	UNC	HANDED	CLEAR	BLACK					3	OIL LEVEL GAUGE ASSEMBLY	P558015/C		
89	UNC	EQUAL	CLEAR	BLACK					4	OIL LEVEL GAUGE ASSEMBLY	P558015/D		
110	METRIC	EQUAL	CLEAR	BLACK					5	OIL LEVEL GAUGE ASSEMBLY	P558015/E		
110	UNC	EQUAL	CLEAR	BLACK					6	OIL LEVEL GAUGE ASSEMBLY	P558015/F		
76	METRIC	EQUAL	CLEAR	BLACK					7	OIL LEVEL GAUGE ASSEMBLY	P558015/G		
76	UNC	EQUAL	CLEAR	BLACK					8	OIL LEVEL GAUGE ASSEMBLY	P558015/H		
76	METRIC	HANDED	CLEAR	BLACK					9	OIL LEVEL GAUGE ASSEMBLY	P558015/J		
51	METRIC	EQUAL	CLEAR	BLACK					10	OIL LEVEL GAUGE ASSEMBLY	P558015/K		
63	METRIC	EQUAL	CLEAR	BLACK					11	OIL LEVEL GAUGE ASSEMBLY	P558015/L		
76	BSF	EQUAL	CLEAR	BLACK					12	OIL LEVEL GAUGE ASSEMBLY	P558015/M		

NOTE- POWERSERVE UK LTD CAN PRODUCE OTHER CONFIGURATIONS NOT SHOWN ON THIS DRAWING. PLEASE PROVIDE DETAILS

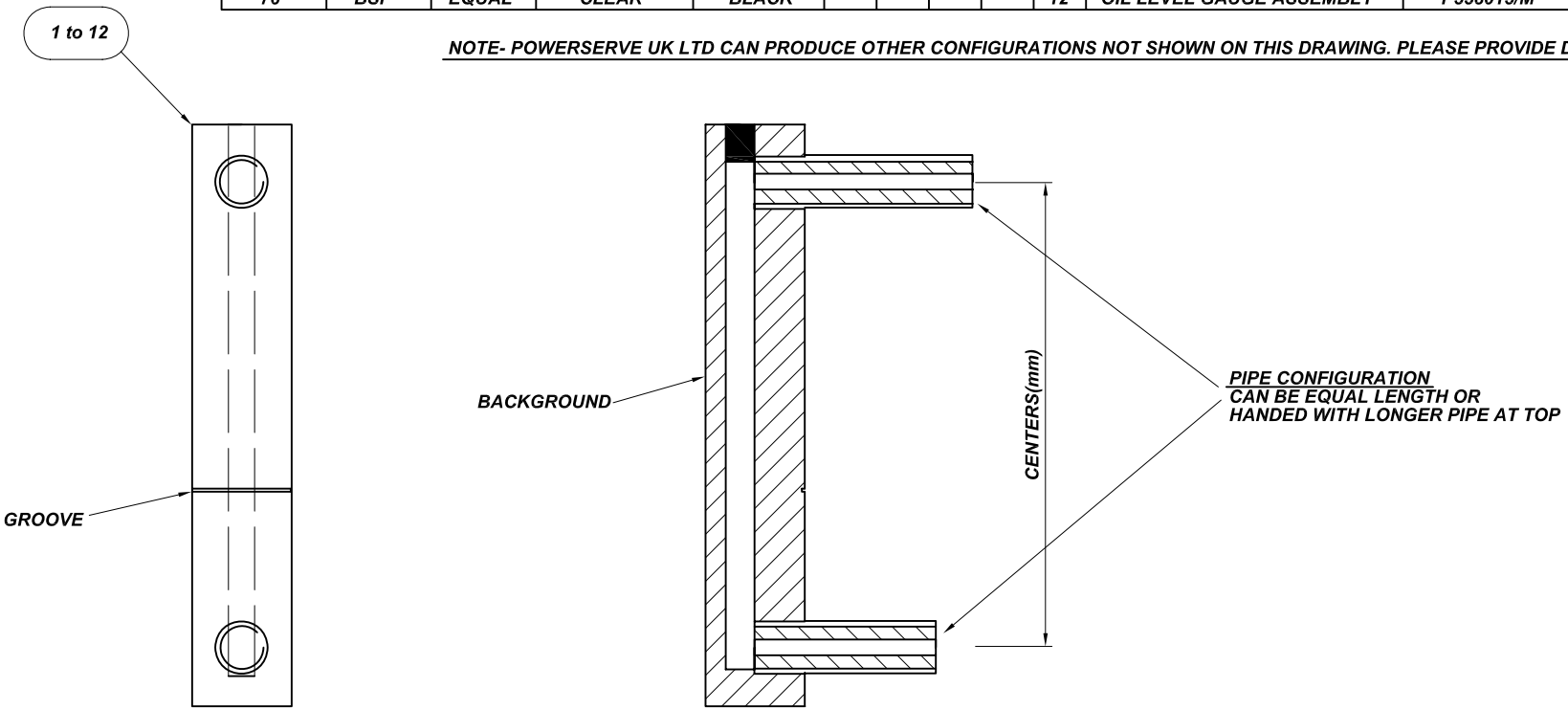

No	Revision notes	Date/Sig	No	Revision notes	Date/Sig	No	Revision notes	Date/Sig

Powerserve UK Limited
SERVING ELECTRICAL UTILITIES

TO CONTACT US
TEL: +44(0)1279-418630
FAX: +44(0)1279-210097
WEB: www.powerserveuk.com
EMAIL: info@powerserveuk.com

Scale NTS Drawn ACS Checked AJT Approved AJT Date 09/03/10

APTTERN OIL LEVEL INDICATOR ASSEMBLIES

RE No P558916 REV 0

Sheet No

TO CONTACT US - TEL: +44(0)1279-418630 WEB: www.powerserveuk.com EMAIL: info@powerserveuk.com

All information contained in this document is confidential and the copyright reserved

Used on dwg MANUAL

P558917

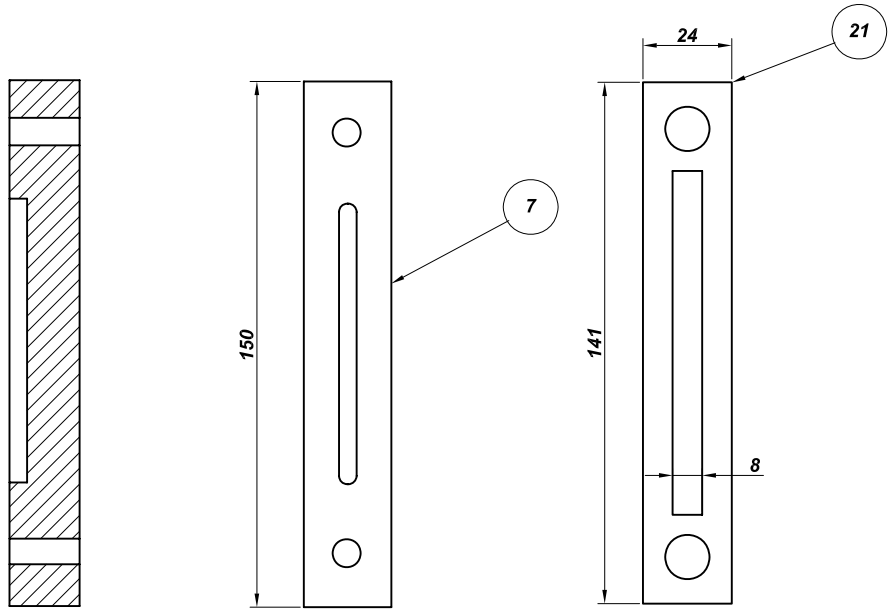

Quantity D	Quantity C	Quantity B	Quantity A	No	Description	Detail No		OEM Part No
				1	PRISMATIC OIL LEVEL GLASS	P558022/1		
				2	PRISMATIC OIL LEVEL GLASS	P558022/2		
				3	PRISMATIC OIL LEVEL GLASS	P558022/3		
				4	GASKET FOR OIL LEVEL GLASS	P558022/4		
				5	GASKET FOR OIL LEVEL GLASS	P558022/5		
				6	GASKET FOR OIL LEVEL GLASS	P558022/6		
				7	OIL LEVEL GAUGE L=150	P558014/1		
				8	CIRCULAR SIGHT GLASS D=56.5	P558021/1		
				9	CIRCULAR SIGHT GLASS D=56.5	P558021/2	ACRYLIC	
				10	CIRCULAR SIGHT GLASS D=42.6	P558021/3		
				11	CIRCULAR SIGHT GLASS D=42.6	P558021/4	ACRYLIC	
				12	CIRCULAR SIGHT GLASS D=42.6	P558021/5		
				13	CIRCULAR SIGHT GLASS D=42.6	P558021/6	ACRYLIC	
				14	CIRCULAR SIGHT GLASS D=102.9	P558021/7		
				15	CIRCULAR SIGHT GLASS D=102.9	P558021/8	ACRYLIC	
				16	CIRCULAR SIGHT GLASS D=38.2	P558021/11	ACRYLIC	
				17	CIRCULAR SIGHT GLASS D=45.4	P558021/9		
				18	CIRCULAR SIGHT GLASS D=45.4	P558021/10	ACRYLIC	
				19	CIRCULAR SIGHT GLASS D=42.6	P558021/12	ACRYLIC	
				20	CIRCULAR SIGHT GLASS D=260	P558021/13	ACRYLIC	
				21	GASKET FOR OIL LEVEL GLASS	P558022/7		

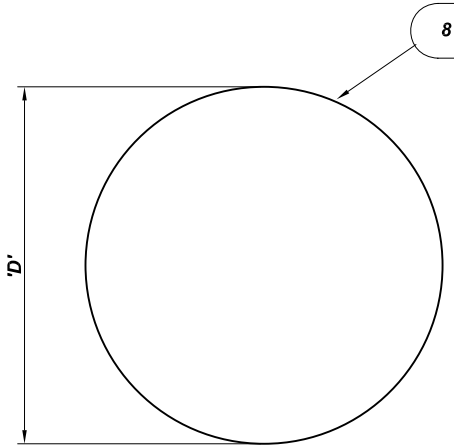

SOME SIGHT GLASSES OF SAME DIA HAVE DIFFERENT THICKNESSES

OIL LEVEL SIGHT GLASS

ITEM	A	B	W
1	567	22.4	41.1
2	149	15.9	35.3
3	156.7	16.4	34.1

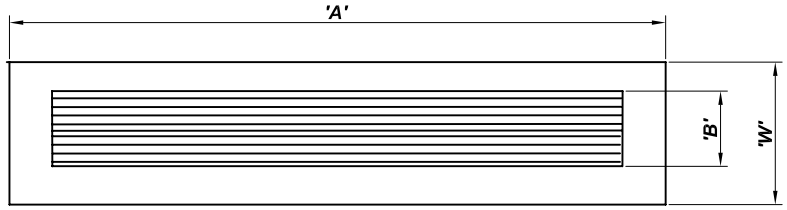

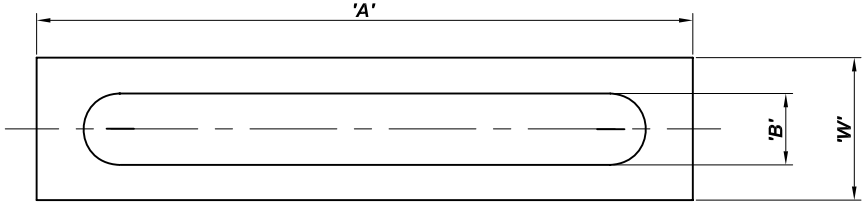

GASKET

ITEM	A	B	W
4	567	22.4	41.1
5	149	15.9	35.3
6	156.7	16.4	34.1

No	Revision notes	Date/Sig	No	Revision notes	Date/Sig	No	Revision notes	Date/Sig

Powerserve UK Limited
SERVING ELECTRICAL UTILITIES

TO CONTACT US
TEL: +44(0)1279-418630
FAX: +44(0)1279-210097
WEB: www.powerserveuk.com
EMAIL: info@powerserveuk.com

Scale NTS | Drawn ACS | Checked AJT | Approved AJT | Date 09/03/10

PATTERN OIL GLASSES AND LEVEL GAUGES

RE No | Sheet No | P558917 | REV 0

TO CONTACT US - TEL: +44(0)1279-418630 WEB: www.powerserveuk.com EMAIL: info@powerserveuk.com

All information contained in this document is confidential and the copyright reserved

Used on dwg MANUAL

P558918

Quantity D	Quantity C	Quantity B	Quantity A	No	Description	Detail No		OEM Part No
				1	OIL LEVEL SIGHT GLASS	P558026/1		
				2	OIL LEVEL SIGHT GLASS	P558026/2		
				3	OIL LEVEL SIGHT GLASS	P558026/3		
				4	OIL LEVEL SIGHT GLASS	P558026/4		
				5	OIL LEVEL SIGHT GLASS	P558026/5		
				6	OIL LEVEL SIGHT GLASS	P558042/1	GLASS	
				7	OIL LEVEL SIGHT GLASS	P558042/2	ACRYLIC	

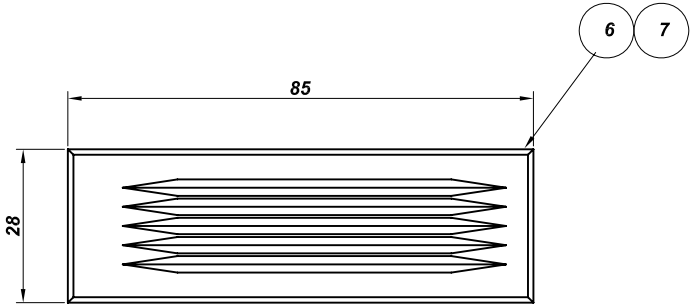

OIL LEVEL SIGHT GLASS

ITEM	A	B	C
1	313	35	75
2	411	35	75

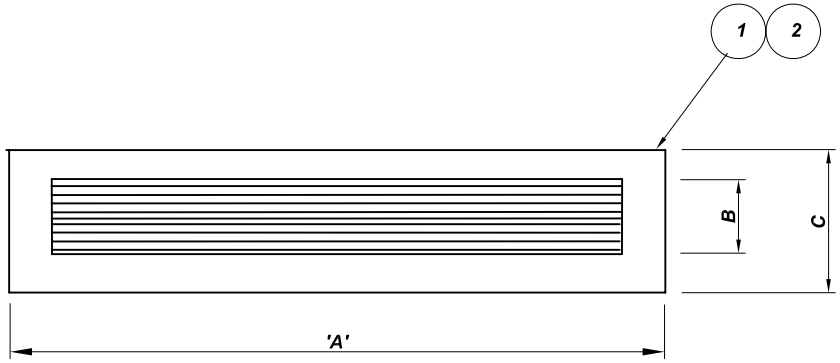

EACH DET IS A DIFFERENT THICKNESS

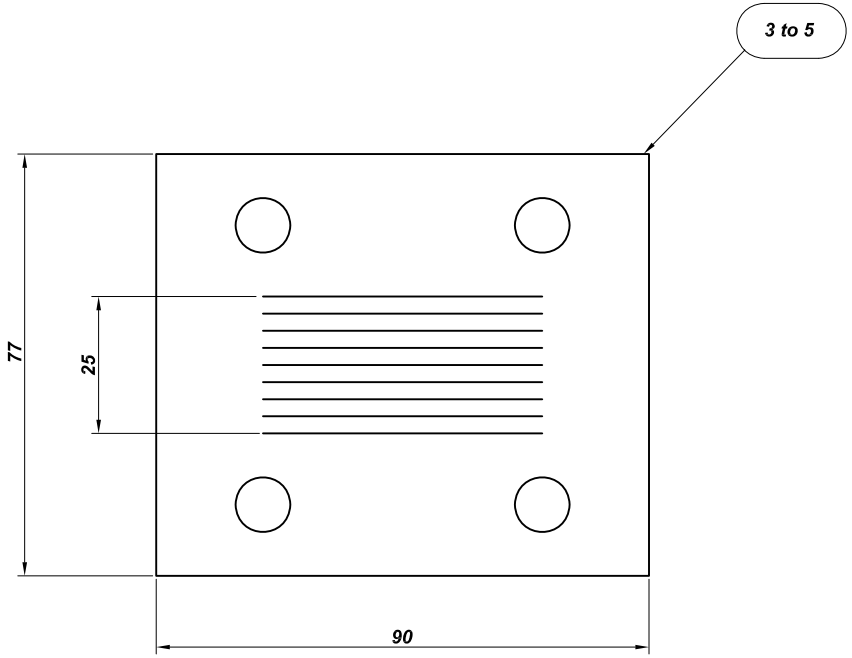

No	Revision notes	Date/Sig	No	Revision notes	Date/Sig	No	Revision notes	Date/Sig

Powerserve UK Limited
SERVING ELECTRICAL UTILITIES

TO CONTACT US
TEL: +44(0)1279-418630
FAX: +44(0)1279-210097
WEB: www.powerserveuk.com
EMAIL: info@powerserveuk.com

APTTERN OIL LEVEL SIGHT GLASSES

Scale NTS | Drawn ACS | Checked AJT | Approved AJT | Date 10/03/10

RE No P558918 REV 0

Sheet No

TO CONTACT US - TEL: +44(0)1279-418630 WEB: www.powerserveuk.com EMAIL: info@powerserveuk.com

All information contained in this document is confidential and the copyright reserved

Used on dwg MANUAL

P558919

Quantity D	Quantity C	Quantity B	Quantity A	No	Description	Detail No		OEM Part No

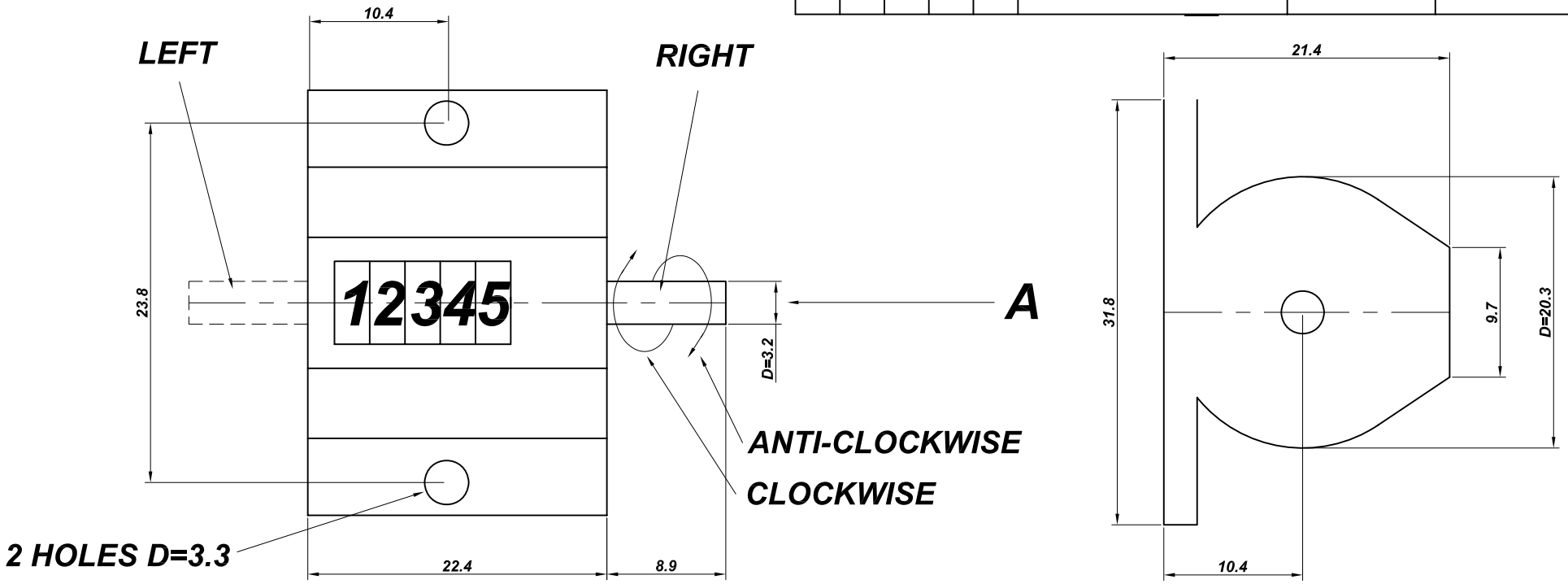

		TICK(IF REQ)		TICK(IF REQ)
SIDE THAT THE SHAFT IS LOCATED	LEFT		RIGHT	
DIRECTION OF DRIVE IN VIEW 'A'	CLOCKWISE		ANTI-CLOCKWISE	
METHOD OF DRIVE (SEE NOTES)	RATCHET		RATCHET REVOLUTION	

NOTES- RATCHET IS 45° PER OPERATION WITH STOPS AND SPRING RETURN
RATCHET REVOLUTION IS 10 COUNTS PER REVOLUTION-REVERSE WILL NOT SUBTRACT COUNTS

No	Revision notes	Date/Sig	No	Revision notes	Date/Sig	No	Revision notes	Date/Sig

Powerserve UK Limited
SERVING ELECTRICAL UTILITIES

TO CONTACT US
TEL: +44(0)1279-418630
FAX: +44(0)1279-210097
WEB: www.powerserveuk.com
EMAIL: info@powerserveuk.com

REPLACEMENT TAPCHANGER COUNTERS

Scale NTS | Drawn ACS | Checked AJT | Approved AJT | Date 10/03/10

RE No P558919 | REV 0

Sheet No

TO CONTACT US - TEL: +44(0)1279-418630 WEB: www.powerserveuk.com EMAIL: info@powerserveuk.com

All information contained in this document is confidential and the copyright reserved

Used on dwg MANUAL

P558920

Quantity D	Quantity C	Quantity B	Quantity A	No	Description	Detail No		OEM Part No
				1	STUD BUSHING	P558030/A		

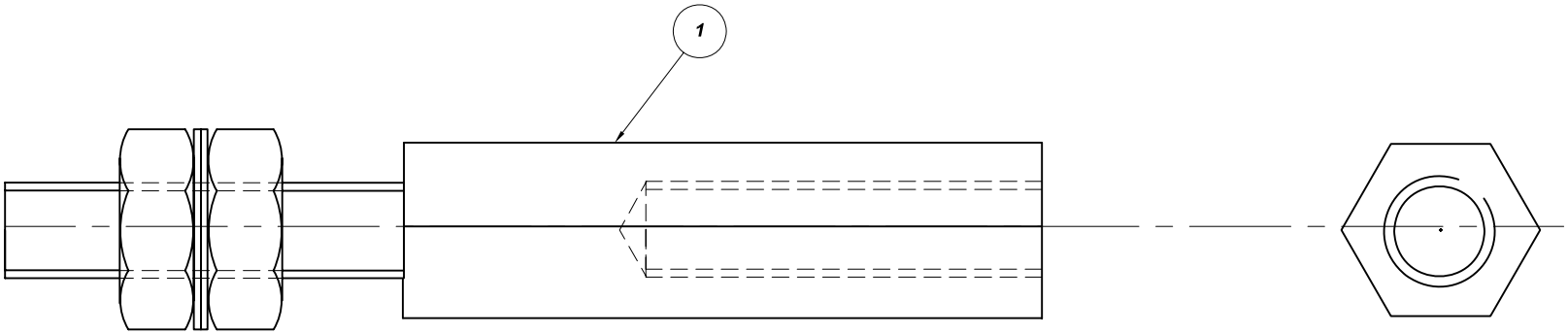

No	Revision notes	Date/Sig	No	Revision notes	Date/Sig	No	Revision notes	Date/Sig

Powerserve UK Limited
SERVING ELECTRICAL UTILITIES

TO CONTACT US
TEL: +44(0)1279-418630
FAX: +44(0)1279-210097
WEB: www.powerserveuk.com
EMAIL: info@powerserveuk.com

PATTERN FUSE END BOX BUSHING

Scale NTS | Drawn ACS | Checked AJT | Approved AJT | Date 10/03/10

RE No P558920 REV 0

Sheet No

TO CONTACT US - TEL: +44(0)1279-418630 WEB: www.powerserveuk.com EMAIL: info@powerserveuk.com

All information contained in this document is confidential and the copyright reserved

Used on dwg MANUAL

P558921

Quantity D	Quantity C	Quantity B	Quantity A	No	Description	Detail No		OEM Part No
				1	OIL LEVEL SIGHT GLASS	P558023/1		
				2	GASKET	P558023/2		

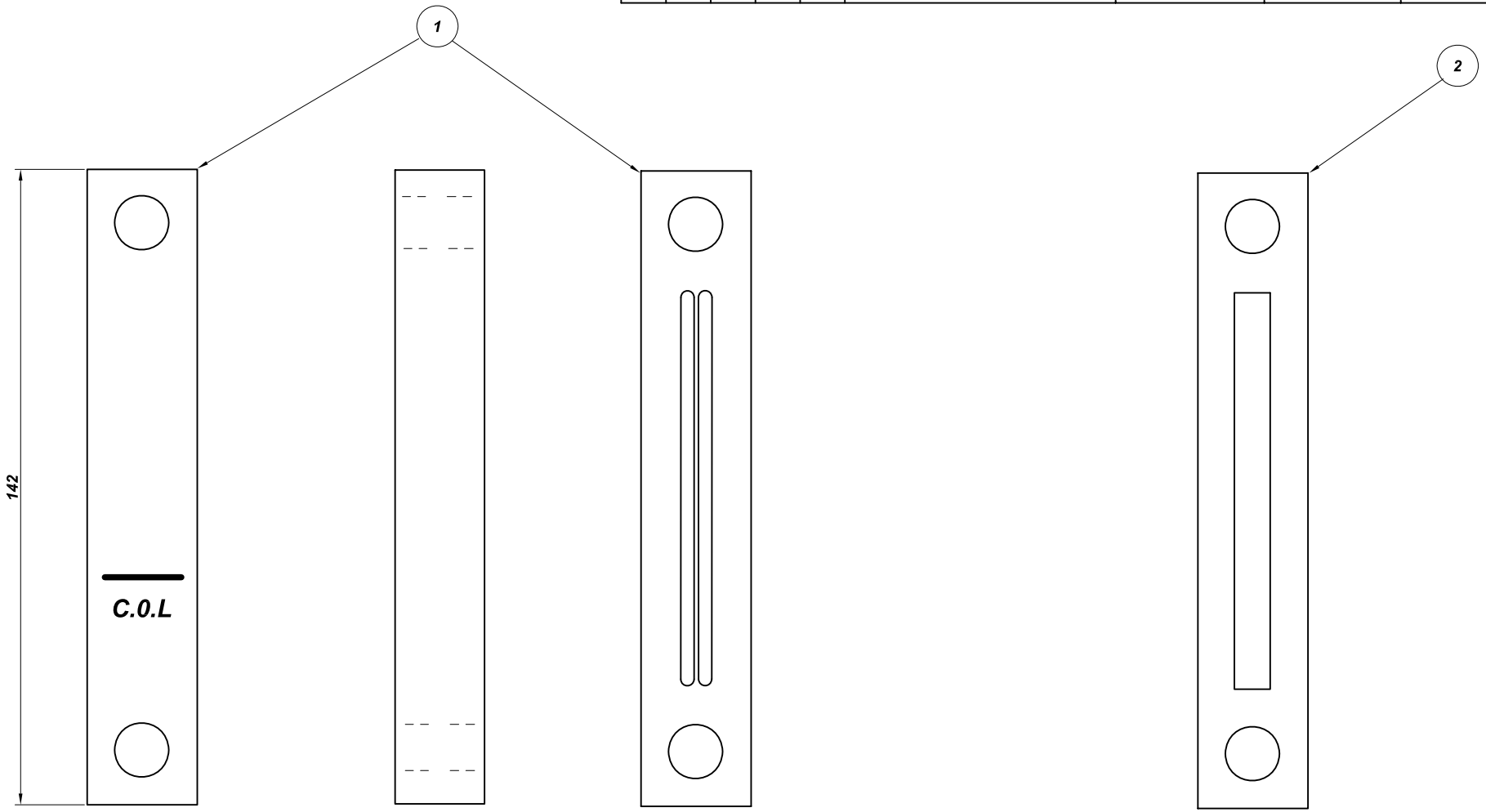

No	Revision notes	Date/Sig	No	Revision notes	Date/Sig	No	Revision notes	Date/Sig

Powerserve UK Limited
SERVING ELECTRICAL UTILITIES

TO CONTACT US
TEL: +44(0)1279-418630
FAX: +44(0)1279-210097
WEB: www.powerserveuk.com
EMAIL: info@powerserveuk.com

PATTERN OIL LEVEL SIGHT GLASS AND GASKET

Scale NTS | Drawn ACS | Checked AJT | Approved AJT | Date 10/03/10

RE No P558921 REV 0

Sheet No

TO CONTACT US - TEL: +44(0)1279-418630 WEB: www.powerserveuk.com EMAIL: info@powerserveuk.com

All information contained in this document is confidential and the copyright reserved

Used on dwg MANUAL

P558922

Quantity D	Quantity C	Quantity B	Quantity A	No	Description	Detail No		OEM Part No
				1	SIGHT GLASS	P558031/1		
				2	GASKET	P558031/2		

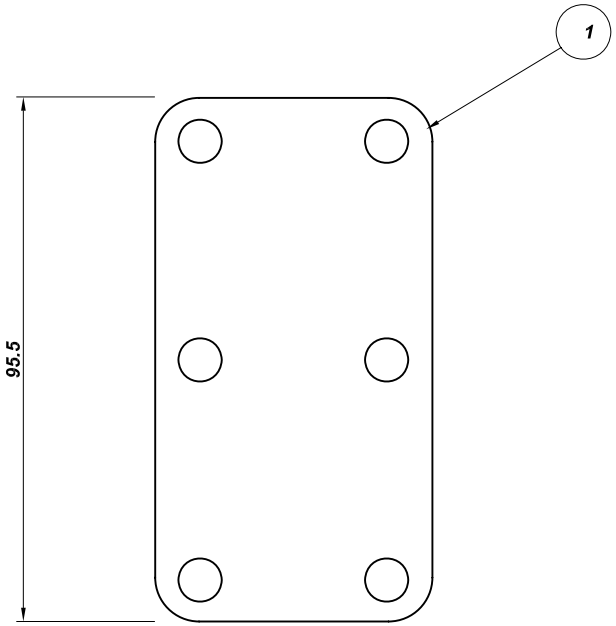

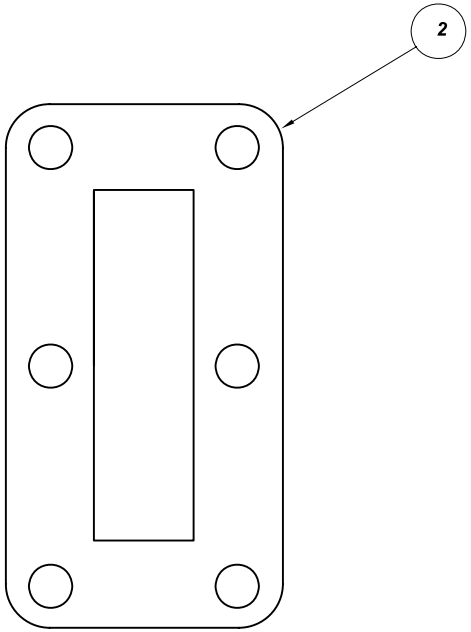

No	Revision notes	Date/Sig	No	Revision notes	Date/Sig	No	Revision notes	Date/Sig

Powerserve UK Limited
SERVING ELECTRICAL UTILITIES

TO CONTACT US
TEL: +44(0)1279-418630
FAX: +44(0)1279-210097
WEB: www.powerserveuk.com
EMAIL: info@powerserveuk.com

PATTERN OIL SIGHT GLASS AND GASKET

Scale NTS | Drawn ACS | Checked AJT | Approved AJT | Date 10/03/10

RE No P558922 REV 0

Sheet No

TO CONTACT US - TEL: +44(0)1279-418630 WEB: www.powerserveuk.com EMAIL: info@powerserveuk.com

All information contained in this document is confidential and the copyright reserved

Used on dwg MANUAL

P558923

Quantity D	Quantity C	Quantity B	Quantity A	No	Description	Detail No		OEM Part No
				1	SIGHT GLASS ASSEMBLY	P558039/A		

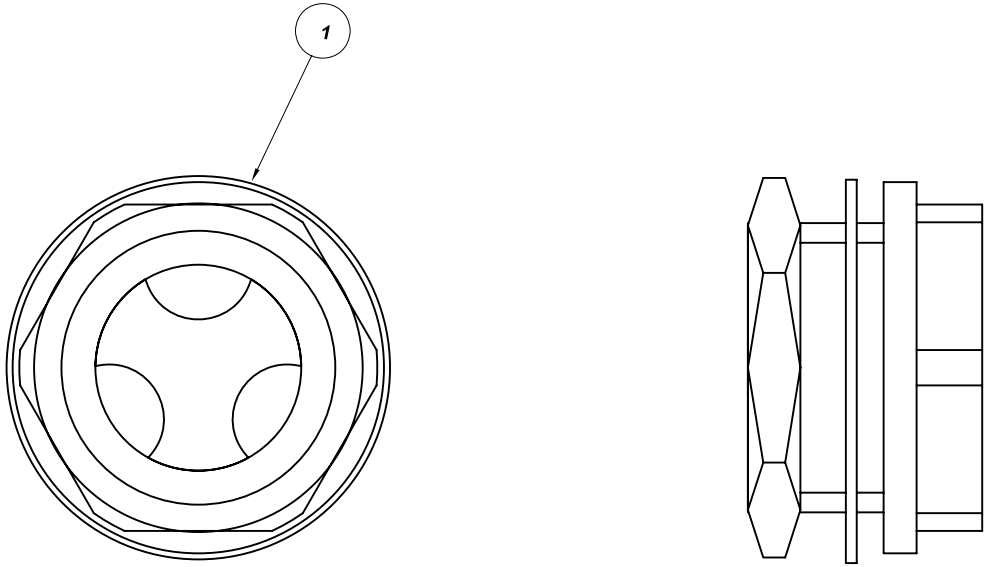

No	Revision notes	Date/Sig	No	Revision notes	Date/Sig	No	Revision notes	Date/Sig

Powerserve UK Limited
SERVING ELECTRICAL UTILITIES

TO CONTACT US
TEL: +44(0)1279-418630
FAX: +44(0)1279-210097
WEB: www.powerserveuk.com
EMAIL: info@powerserveuk.com

PATTERN SIGHT GL;ASS, WASHER AND SEAL

Scale NTS | Drawn ACS | Checked AJT | Approved AJT | Date 10/03/10

RE No P558923 REV 0

Sheet No

TO CONTACT US - TEL: +44(0)1279-418630 WEB: www.powerserveuk.com EMAIL: info@powerserveuk.com

All information contained in this document is confidential and the copyright reserved

Used on dwg MANUAL

P558924

Quantity D	Quantity C	Quantity B	Quantity A	No	Description	Detail No		OEM Part No
				1	RIGHT HAND END CAP	P558043/A		
				2	LEFT HAND END CAP	P558043/B		
				3	BAND JOINT COVER	P558044/A		
				4	END PLATE	P558045/1		
				5	BRIDGING PLATE	P558045/2		
				6	BUSBAR COVER	P558049/A		

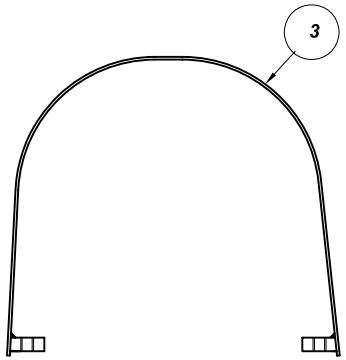

SHEILD IS HANDED TO MATCH P558043

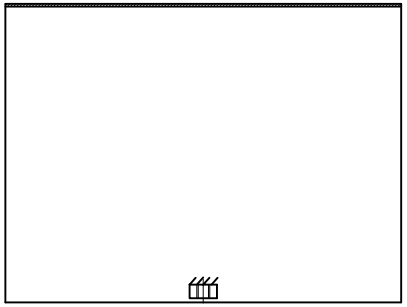

SECTIONED SIDE VIEW OF DETAIL 3

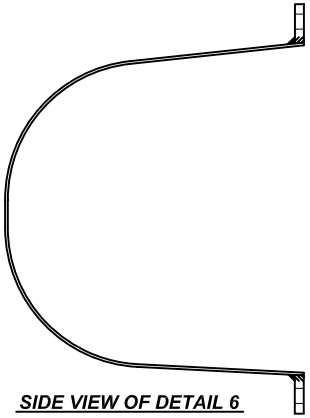

SIDE VIEW OF DETAIL 6
SHEILD IS HANDED TO MATCH P558043

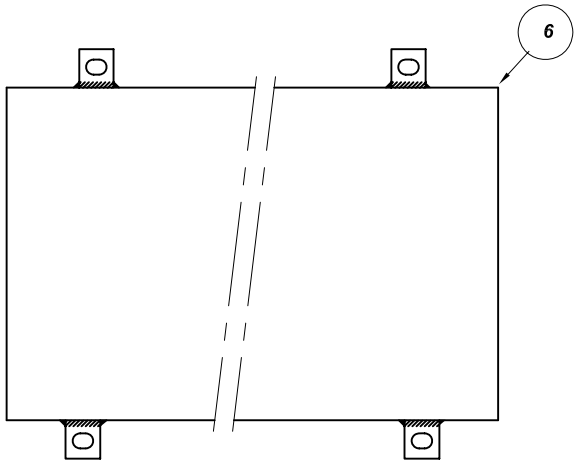

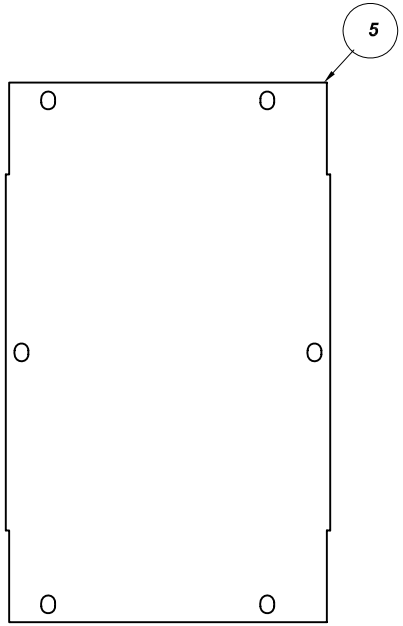

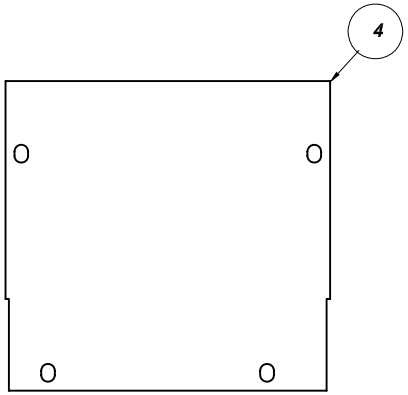

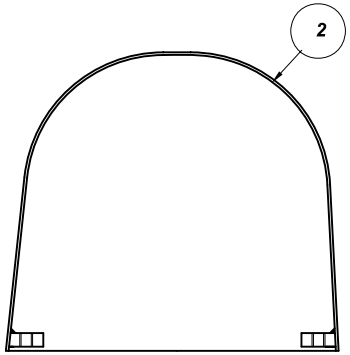

LEFT HAND END CAP

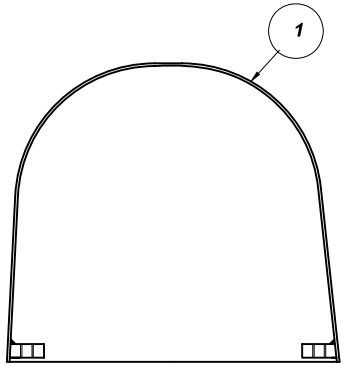

RIGHT HAND END CAP

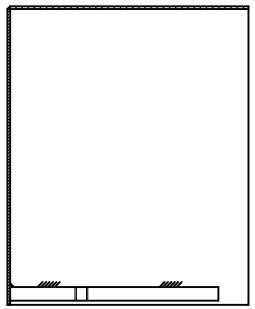

COMMON SECTIONED SIDE VIEW OF DETAILS 1 & 2

No	Revision notes	Date/Sig	No	Revision notes	Date/Sig	No	Revision notes	Date/Sig

Powerserve UK Limited
SERVING ELECTRICAL UTILITIES

TO CONTACT US
TEL: +44(0)1279-418630
FAX: +44(0)1279-210097
WEB: www.powerserveuk.com
EMAIL: info@powerserveuk.com

PATTERN SHIELDS AND PLATES

Scale NTS | Drawn ACS | Checked AJT | Approved AJT | Date 10/03/10

RE No P558924 | REV 0

Sheet No

TO CONTACT US - TEL: +44(0)1279-418630 WEB: www.powerserveuk.com EMAIL: info@powerserveuk.com

All information contained in this document is confidential and the copyright reserved

Used on dwg MANUAL

P669903

DETAILS	TYPE
1, 2, 3, 5, 6, 7,8,9	LMT X2/JO
1, 3, 4, 5, 6, 7, 8, 10	LMT X5/JO
1, 3, 4, 5, 6, 7, 8, 10	LMT X6/JO
1, 3, 4, 5, 6, 7, 8, 10	LMT 23
1, 2, 3, 5, 6, 7,8,9	
1, 2, 3, 5, 6, 7,8,9	

Quantity D	Quantity C	Quantity B	Quantity A	No	Description	Detail No	Min Code	OEM Part No
		1	1	1	FIXED CONTACT	P669047/A	822 1201	861A81X
			1	2	MOVING CONTACT	P669048/A	822 1610	861A367Y
				3	REPLACEMENT ARCING FINGER	P669042/A	822 1205	861A1659
				4	REPLACEM'NT MVNG C'TACT TIP	P669040/1	822 1203	
		1		5	400 AMP MOVING CONTACT	P669048/B	882-1210	861A15Y
				6	REPLACEMENT CONTACT FINGER	P669042/1		861A1660
				7	TURBULATOR VENT	P669061/B	882 1287	861A390X
				8	GASKET	P669128/1	882 1280	861A105
				9	TURBULATOR	P669061/A	882 1684	861A357Y
				10	TURBULATOR	P669063/A		861A392Y

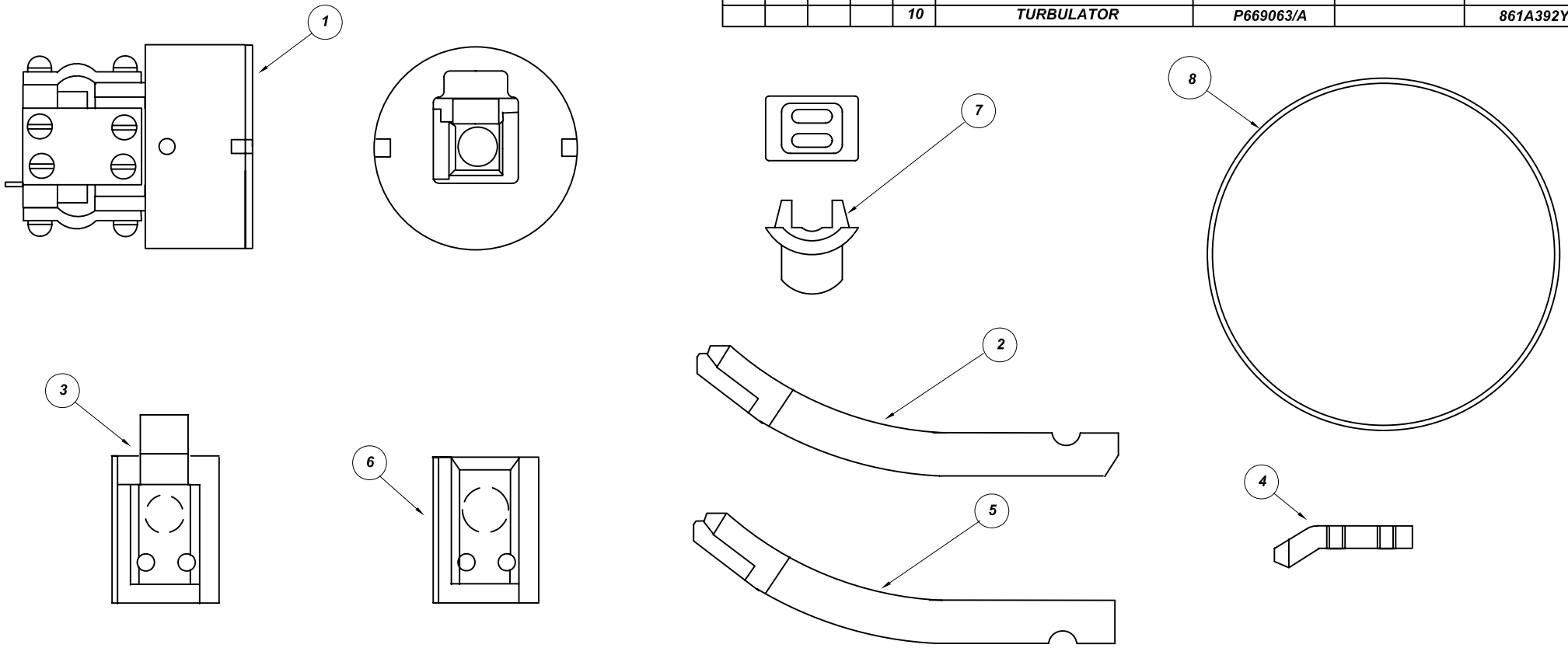

No	Revision notes	Date/Sig	No	Revision notes	Date/Sig	No	Revision notes	Date/Sig

Powerserve UK Limited
SERVING ELECTRICAL UTILITIES

TO CONTACT US
TEL: +44(0)1279-418630
FAX: +44(0)1279-210097
WEB: www.powerserveuk.com
EMAIL: info@powerserveuk.com

Scale NTS | Drawn ACS | Checked AJT | Approved AJT | Date 02/03/10

PATTERN CONTACTS FOR REYROLLE TYPE LMT SWITCHGEAR

RE No P669903 REV 0

Sheet No

TO CONTACT US - TEL: +44(0)1279-418630 WEB: www.powerserveuk.com EMAIL: info@powerserveuk.com

All information contained in this document is confidential and the copyright reserved

Used on dwg MANUAL

P669904

Quantity D	Quantity C	Quantity B	Quantity A	No	Description	Detail No		OEM Part No
				1	FIXED CONTACT ASSEMBLY	P669076/A		
				2	MOVING CONTACT ASSEMBLY	P669077/A		
				3	MAIN CONTACT FINGER	P669115/2		
				4	ARCING CONTACT FINGER	P669115/A		
				5	MOVING CONTACT TIP	P669115/1		

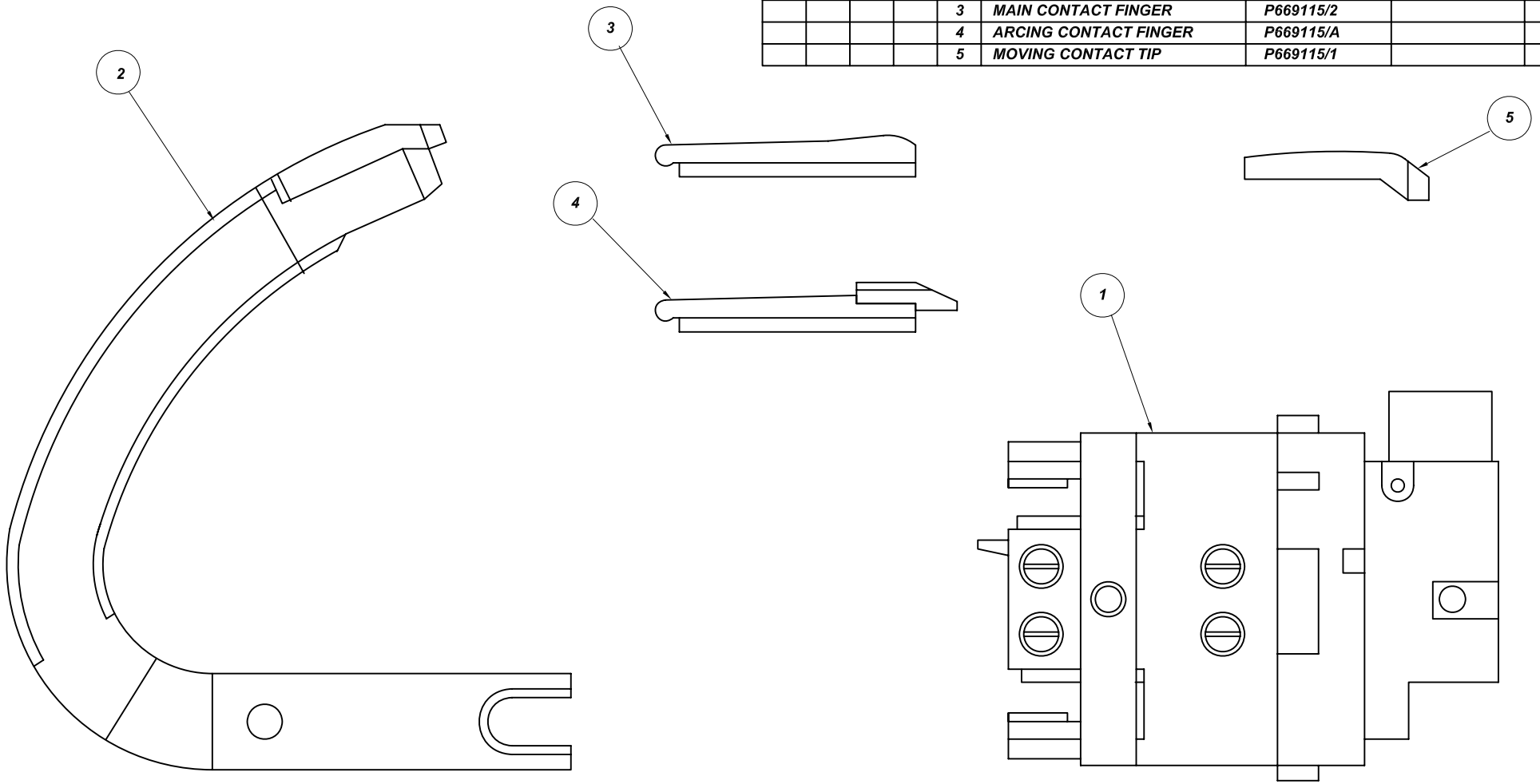

No	Revision notes	Date/Sig	No	Revision notes	Date/Sig	No	Revision notes	Date/Sig

Powerserve UK Limited
SERVING ELECTRICAL UTILITIES

TO CONTACT US
TEL: +44(0)1279-418630
FAX: +44(0)1279-210097
WEB: www.powerserveuk.com
EMAIL: info@powerserveuk.com

PATTERN PARTS FOR REYROLLE TYPE LMT 1200A BREAKER

Scale NTS | Drawn ACS | Checked AJT | Approved AJT | Date 02/03/10

RE No P669904 REV 0

Sheet No

TO CONTACT US - TEL: +44(0)1279-418630 WEB: www.powerserveuk.com EMAIL: info@powerserveuk.com

All information contained in this document is confidential and the copyright reserved

Used on dwg MANUAL

P669911

	Quantity				No	Description	Detail No		OEM Part No
E	D	C	B	A					
	6	6	6	6	1	FIXED CONTACT ASSY	P669056/A		
				6	2	MOVING CONTACT ASSY	P669053/A	CT 78 TIP	31A7321
			6		3	MOVING CONTACT ASSY	P669053/B	CT 75 TIP	Customer Spec
		6			4	MOVING CONTACT ASSY	P669053/C	BS970 070M20	31A7321 S
	6				5	MOVING CONTACT ASSY	P669053/D	CT78 TIP	PLATED BODY
1					6	ARC FINGER FOR FIXED CONTACT	P669051/A		
3					7	FIXED CONTACT FINGER	P669051/B		

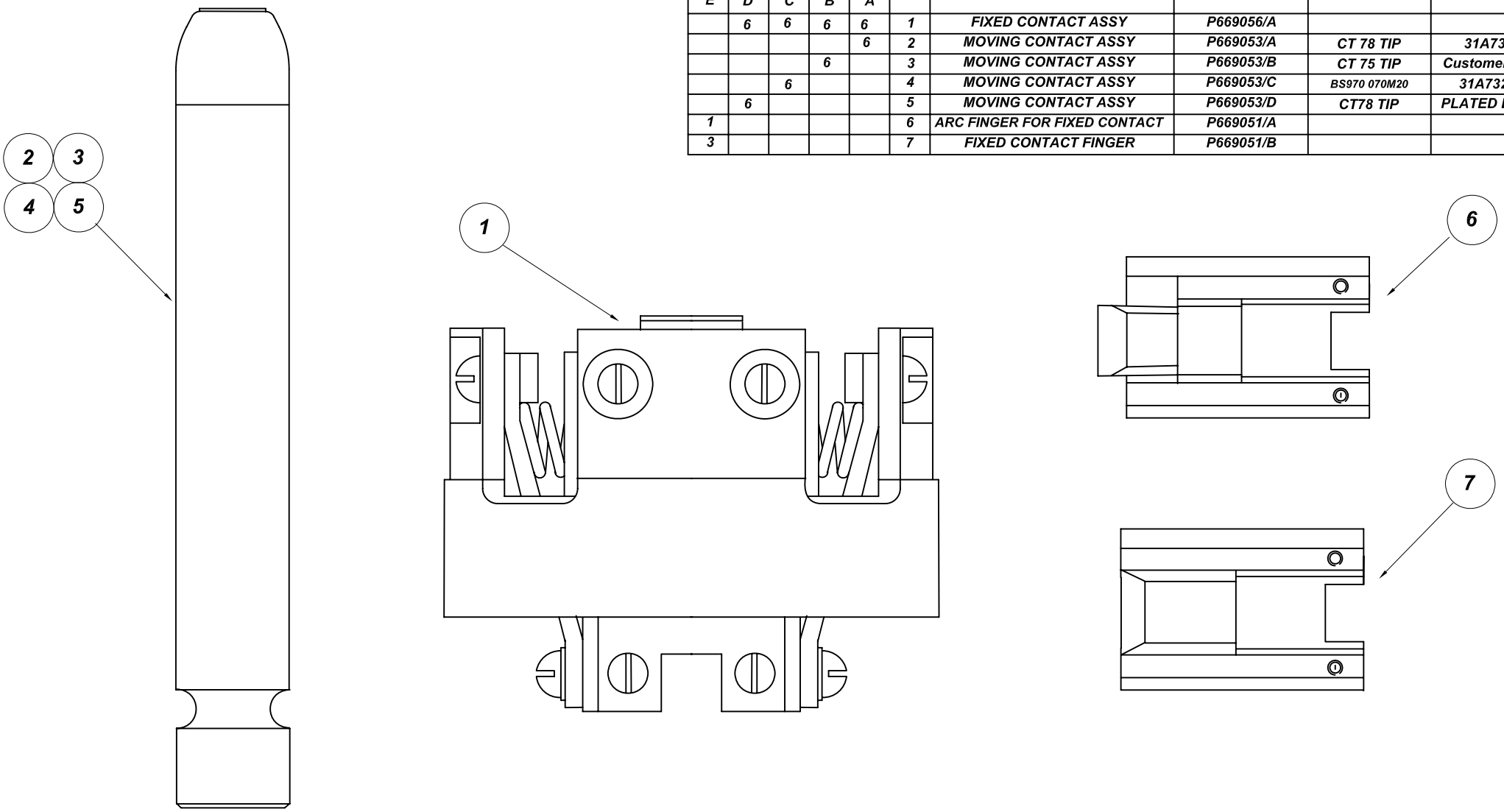

No	Revision notes	Date/Sig	No	Revision notes	Date/Sig	No	Revision notes	Date/Sig

Powerserve UK Limited
SERVING ELECTRICAL UTILITIES

TO CONTACT US
TEL: +44(0)1279-418630
FAX: +44(0)1279-210097
WEB: www.powerserveuk.com
EMAIL: info@powerserveuk.com

Scale NTS | Drawn ACS | Checked AJT | Approved AJT | Date 02/03/10

PATTERN CONTACTS FOR REYROLLE TYPE C6T SWITCHGEAR

RE No P669911 REV 0

Sheet No

TO CONTACT US - TEL: +44(0)1279-418630 WEB: www.powerserveuk.com EMAIL: info@powerserveuk.com

All information contained in this document is confidential and the copyright reserved

Used on dwg MANUAL

P669913

Quantity D	Quantity C	Quantity B	Quantity A	No	Description	Detail No		OEM Part No
				1	FIXED CONTACT ASSEMBLY	P669068/A		
			1	2	ARCING FINGER	P669067/A		31A5623Y
			3	3	MAIN CONTACT FINGER	P669067/1		31A5624Y
				4	MOVING CONTACT-STEEL TIP	P669069/A		31A7321
				5	MOVING CONTACT-W/Cu TIP	P669069/B		31A7321
				6	MOVING CONTACT-STEEL TIP	P669072/A		21A3050X
				7	MOVING CONTACT-W/Cu TIP	P669072/B		21A3050X
				8	MOVING CONTACT-STEEL TIP	P669073/A		21A3050X
				9	MOVING CONTACT-W/Cu TIP	P669073/B		21A3050X
				10	VENT BLOCK	P669125/A		

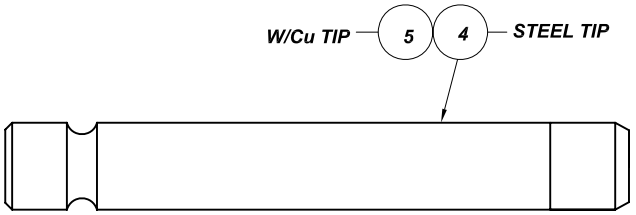

STANDARD MOVING CONTACT
USED WITH ROUND TYPE PLUNGER BAR

ALTERNATIVE MOVING CONTACT FOR C6T, C8T & C9T
USED WITH PLATE TYPE PLUNGER BAR

ALTERNATIVE MOVING CONTACT FOR C5T & C7T
USED WITH PLATE TYPE PLUNGER BAR

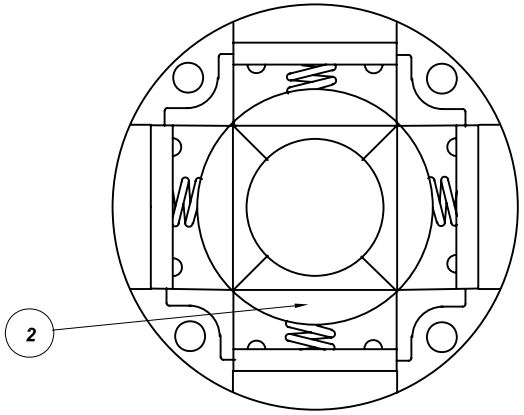

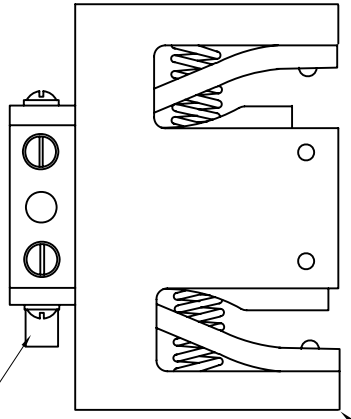

IMPORTANT NOTE: RELATIONSHIP BETWEEN PIN AND ARCING FINGER IS IMPORTANT

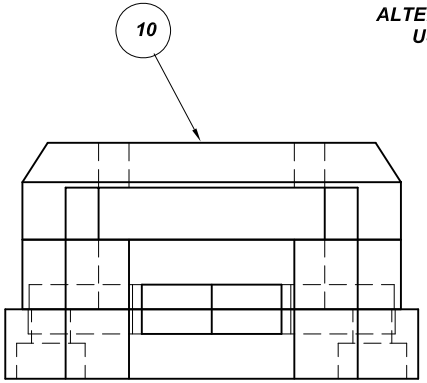

1 USED ON C5T AND C7T

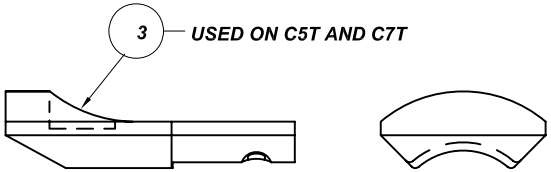

USED ON C5T AND C7T

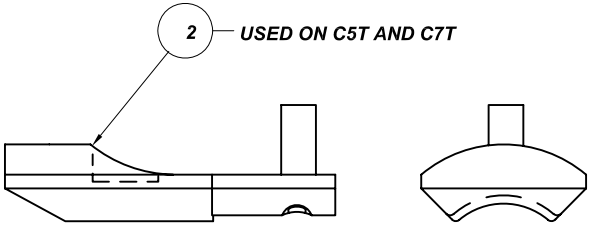

USED ON C5T AND C7T

No	Revision notes	Date/Sig	No	Revision notes	Date/Sig	No	Revision notes	Date/Sig

Powerserve UK Limited
SERVING ELECTRICAL UTILITIES

TO CONTACT US
TEL: +44(0)1279-418630
FAX: +44(0)1279-210097
WEB: www.powerserveuk.com
EMAIL: info@powerserveuk.com

PATTERN PARTS FOR REYROLLE TYPE C SERIES SWITCHGEAR

Scale NTS | Drawn ACS | Checked AJT | Approved AJT | Date 02/03/10

RE No P669913 | REV 0

Sheet No

Form No 3-7.3.6-A3 Rev B

TO CONTACT US - TEL: +44(0)1279-418630 WEB: www.powerserveuk.com EMAIL: info@powerserveuk.com

All information contained in this document is confidential and the copyright reserved

Used on dwg MANUAL

P669918

Quantity D	Quantity C	Quantity B	Quantity A	No	Description	Detail No	Min No	OEM Part No
			1	1	MOVING CONTACT BODY (T3/X5)	P669060/1		801A318
			1	2	CONTACT TIP (T3/X5)	P669060/2	882 6104	801A316
			2	3	SCREW	P669060/3		
				4	ARCING CONTACT ASSY (T3/X3)	P669058/A	882 6105	801A865
		6		5	MOVING CONTACT ASSY (L42T T3/X5)	P669918/A	882 6100	801A513
		6		6	FIXED CONTACT ASSY (T3/X5)	P669064/A	822 6101	801A687
				7	FINGER (L42T T3/X5)	P669087/1	822 6106	801A732
				8	TURBULATOR	P669065/A	882 6115	801A398X
				9	VENT PLATE	P669065/1	882 6116	801A392Y
				10	ARCING FINGER (L42T T3/X5)	P669087/A	882 6105	801A685
	1			11	MVG CONTACT BODY (L42T T3/X3)	P669105/1		
	1			12	ARCING TIP (L42T T3/X3)	P669105/2		801A231
				13	MOVING CONTACT ASSY (L42T T3/X3)	P669918/C		801A232

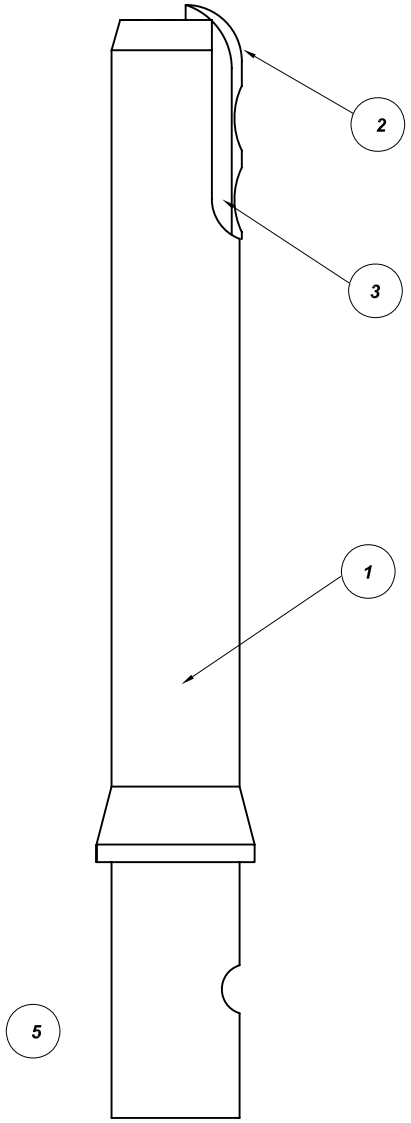

L42T T3/X5

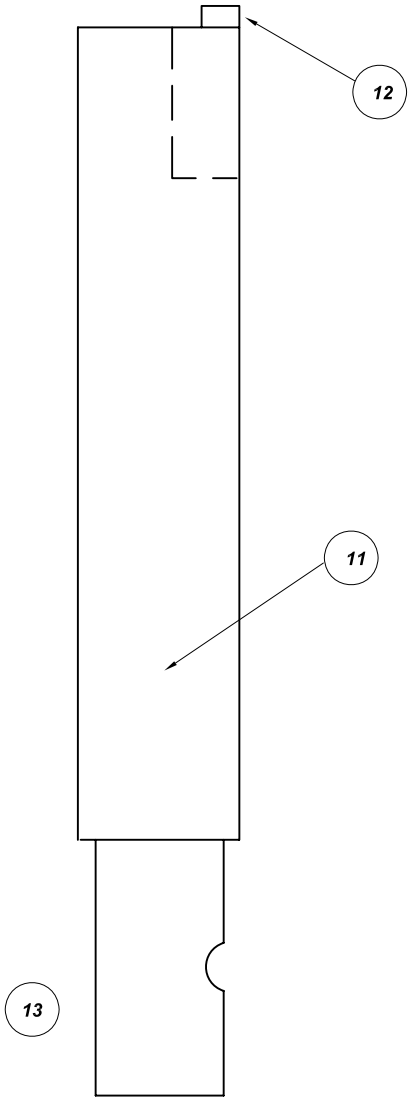

L42T T3/X3

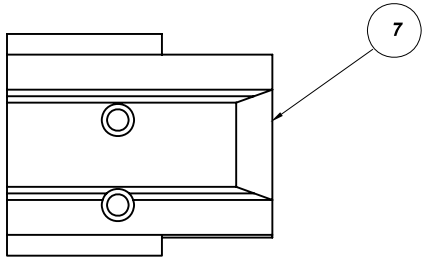

L42T T3/X5

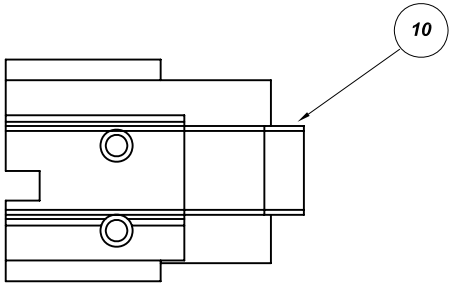

L42T T3/X5

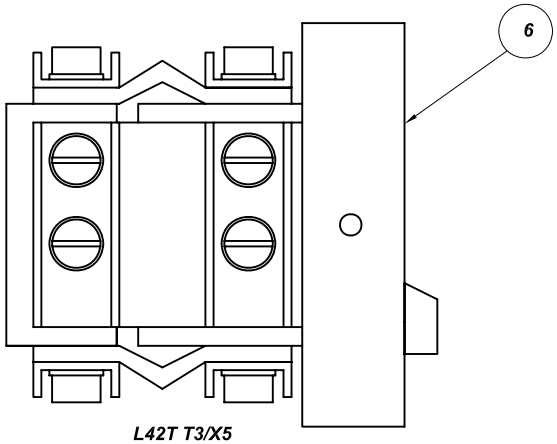

L42T T3/X5

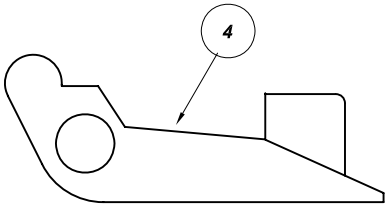

L42T T3/X3

No	Revision notes	Date/Sig	No	Revision notes	Date/Sig	No	Revision notes	Date/Sig

Powerserve UK Limited
SERVING ELECTRICAL UTILITIES

TO CONTACT US
TEL: +44(0)1279-418630
FAX: +44(0)1279-210097
WEB: www.powerserveuk.com
EMAIL: info@powerserveuk.com

PATTERN CONTACTS FOR REYROLLE TYPE L42T SWITCHGEAR

Scale NTS | Drawn ACS | Checked AJT | Approved AJT | Date 02/03/10

RE No P669918 | REV 0

Sheet No

TO CONTACT US - TEL: +44(0)1279-418630 WEB: www.powerserveuk.com EMAIL: info@powerserveuk.com

All information contained in this document is confidential and the copyright reserved

Used on dwg MANUAL

P669919

Quantity D	Quantity C	Quantity B	Quantity A	No	Description	Detail No		OEM Part No
				1	MOVING CONTACT	P669094/A		891A596
				2	FIXED CONTACT ASSEMBLY	P669092/A		891A1102
				3	ARCING FINGER	P669093/A		891A1095
				4	MAIN CONTACT FINGER	P669093/1		891A732
				5	TURBULATOR	P669123/A	Not Shown	891A615X
				6	VENT PLATE	P669122/1		891A1135
				7	TANK GASKET	P669107/1	Not Shown	891A712

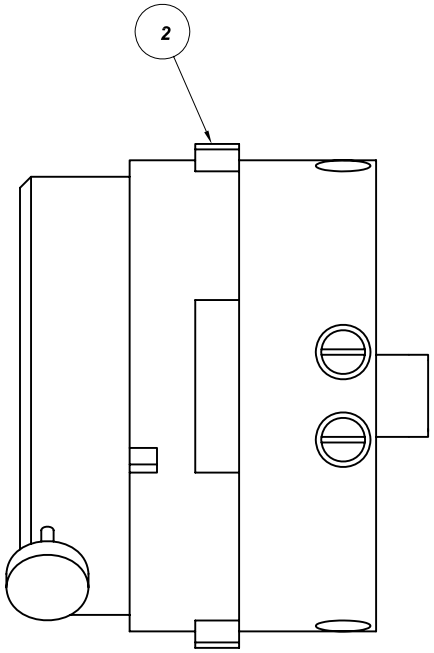

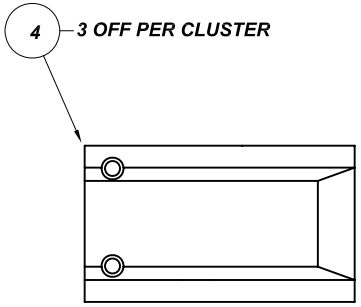

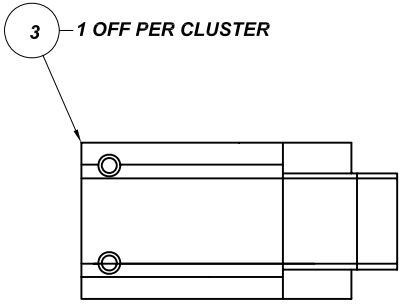

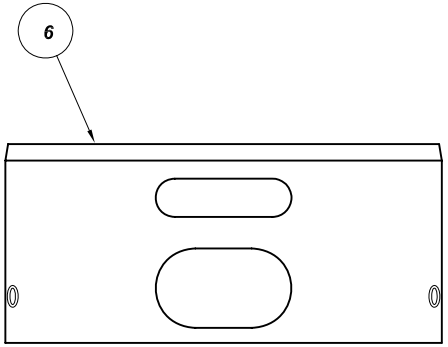

No	Revision notes	Date/Sig	No	Revision notes	Date/Sig	No	Revision notes	Date/Sig

Powerserve UK Limited
SERVING ELECTRICAL UTILITIES

TO CONTACT US
TEL: +44(0)1279-418630
FAX: +44(0)1279-210097
WEB: www.powerserveuk.com
EMAIL: info@powerserveuk.com

PATTERN PARTS FOR REYROLLE TYPE L800T SWITCHGEAR

Scale NTS | Drawn ACS | Checked AJT | Approved AJT | Date 02/03/10

RE No P669919 | REV 0

Sheet No

TO CONTACT US - TEL: +44(0)1279-418630 WEB: www.powerserveuk.com EMAIL: info@powerserveuk.com

All information contained in this document is confidential and the copyright reserved

Used on dwg MANUAL

P669920

Quantity D	Quantity C	Quantity B	Quantity A	No	Description	Detail No		OEM Part No
				1	FIXED CONTACT	P669066/A		
				2	MOVING CONTACT	P669066/B		

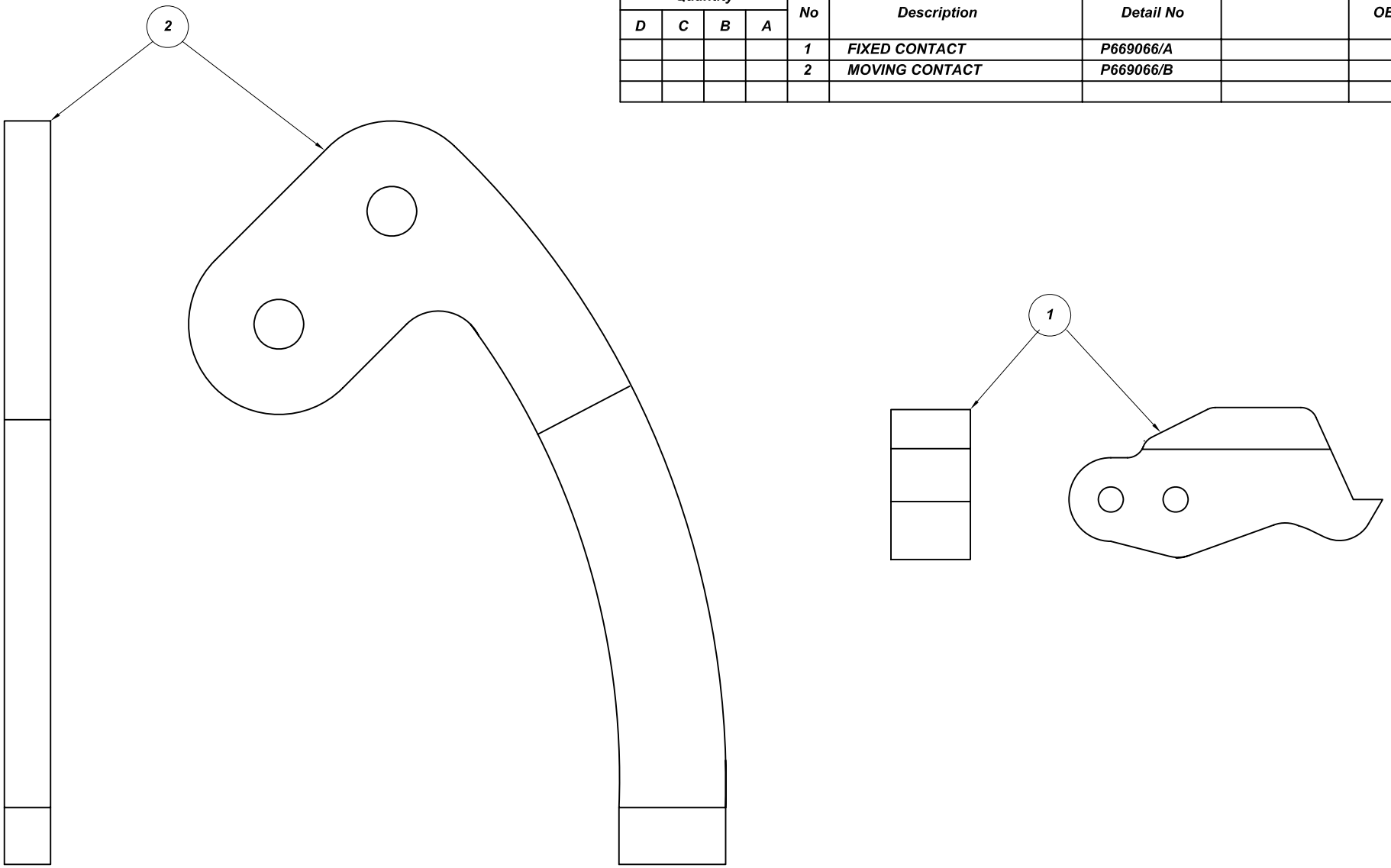

No	Revision notes	Date/Sig	No	Revision notes	Date/Sig	No	Revision notes	Date/Sig

Powerserve UK Limited
SERVING ELECTRICAL UTILITIES

TO CONTACT US
TEL: +44(0)1279-418630
FAX: +44(0)1279-210097
WEB: www.powerserveuk.com
EMAIL: info@powerserveuk.com

Scale NTS | Drawn ACS | Checked AJT | Approved AJT | Date 02/03/10

PATTERN FIXED AND MOVING CONTACTS FOR REYROLLE TYPE OYT SWITCHGEAR

RE No P669920 REV 0

Sheet No

TO CONTACT US - TEL: +44(0)1279-418630 WEB: www.powerserveuk.com EMAIL: info@powerserveuk.com

All information contained in this document is confidential and the copyright reserved

Used on dwg MANUAL

P669921

Quantity D	Quantity C	Quantity B	Quantity A	No	Description	Detail No		OEM Part No
				1	FIXED CONTACT ASSEMBLY	P669071/A		
			1	2	ARCING FINGER-TIPPED	P669074/A		
			3	3	MAIN CONTACT FINGER	P669067/1		
				4	MOVING CONTACT-TIPPED	P669070/A		681A810.ELK
				5	MOVING CONT-STEEL TIPPED	P669070/B		

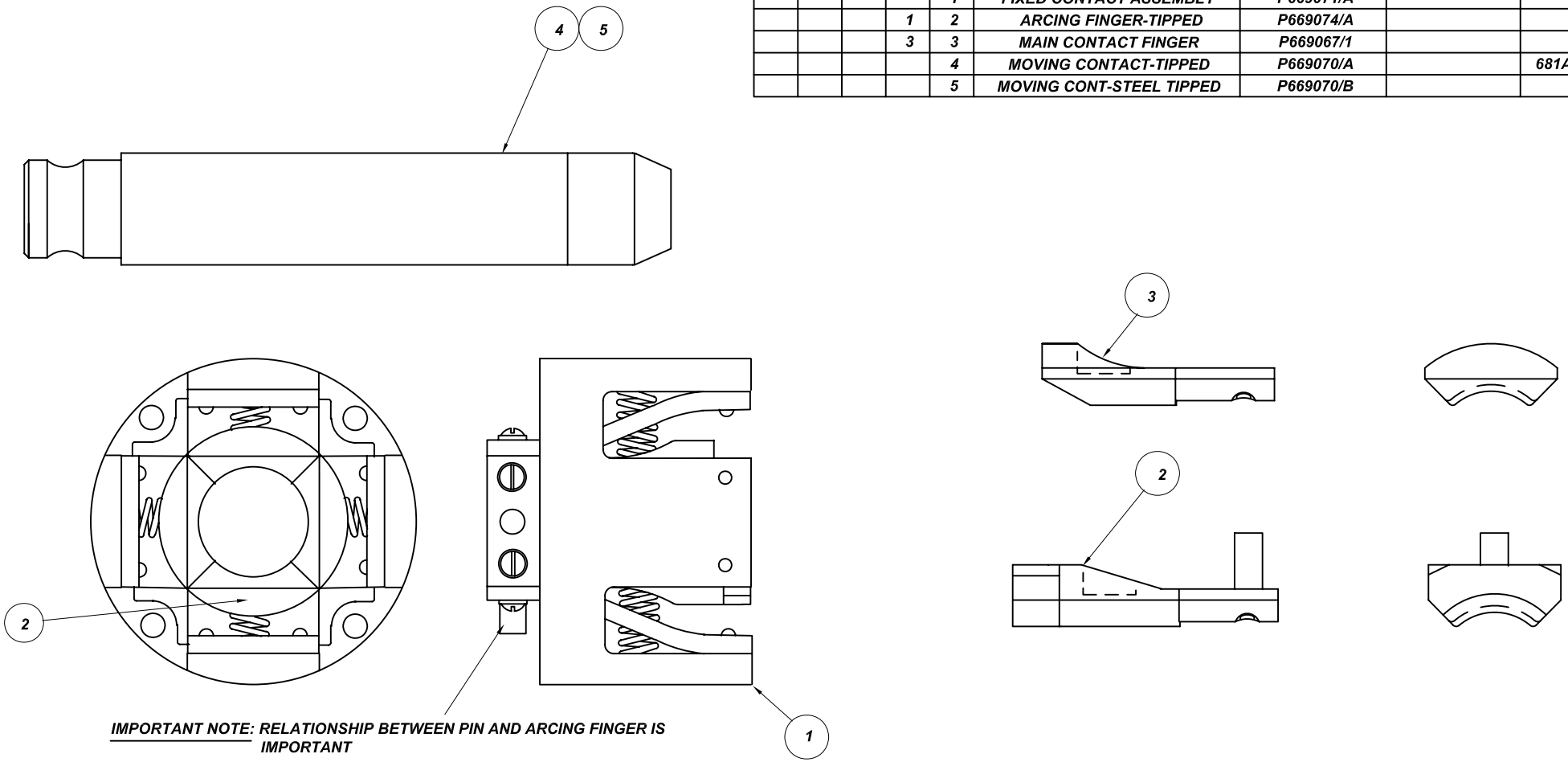

IMPORTANT NOTE: RELATIONSHIP BETWEEN PIN AND ARCING FINGER IS IMPORTANT

No	Revision notes	Date/Sig	No	Revision notes	Date/Sig	No	Revision notes	Date/Sig

Powerserve UK Limited
SERVING ELECTRICAL UTILITIES

TO CONTACT US
TEL: +44(0)1279-418630
FAX: +44(0)1279-210097
WEB: www.powerserveuk.com
EMAIL: info@powerserveuk.com

Scale NTS | Drawn ACS | Checked AJT | Approved AJT | Date 02/03/10

PATTERN PARTS FOR REYROLLE TYPE LA23T SWITCHGEAR

RE No P669921 REV 0

Sheet No

TO CONTACT US - TEL: +44(0)1279-418630 WEB: www.powerserveuk.com EMAIL: info@powerserveuk.com

All information contained in this document is confidential and the copyright reserved

Used on dwg MANUAL

P669923

Quantity D	Quantity C	Quantity B	Quantity A	No	Description	Detail No		OEM Part No
				1	MOVING CONTACT BLADE	P669085/A		971A1287
				2	FIXED CONTACT CLUSTER	P669090/A		971A175Y
				3	ARCING FINGER	P669096/A		971A138
				4	FINGER	P669097/1		971A142
				5	AUX ARCING FINGER	P669098/A		971A133
				6	TANK GASKET	P669100/1		971A253

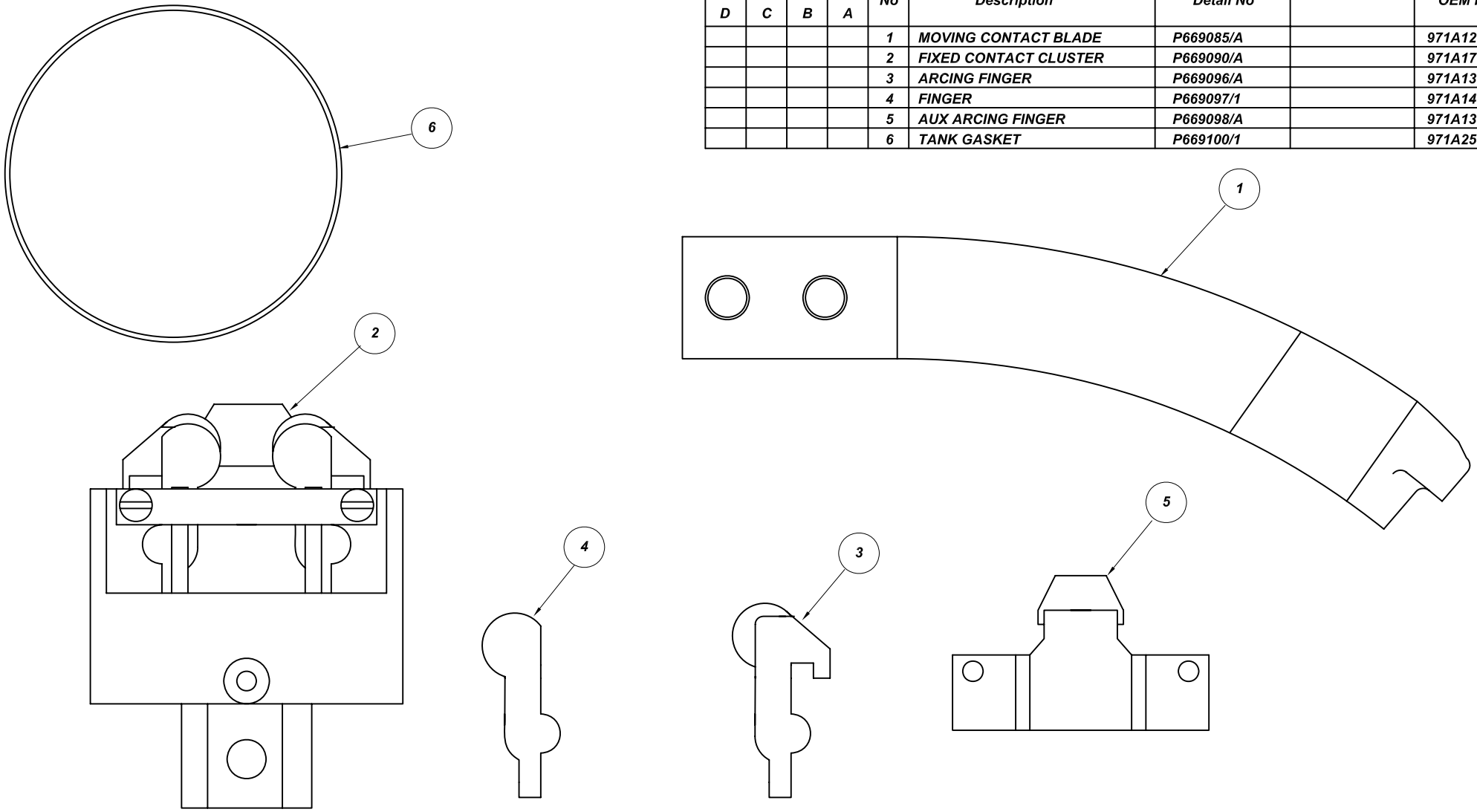

No	Revision notes	Date/Sig	No	Revision notes	Date/Sig	No	Revision notes	Date/Sig

Powerserve UK Limited
SERVING ELECTRICAL UTILITIES

TO CONTACT US
TEL: +44(0)1279-418630
FAX: +44(0)1279-210097
WEB: www.powerserveuk.com
EMAIL: info@powerserveuk.com

PATTERN FIXED AND MOVING CONTACTS AND FINGERS FOR REYROLLE LMT2/X3 (630A)

Scale NTS | Drawn ACS | Checked AJT | Approved AJT | Date 02/03/10

RE No P669923 REV 0

Sheet No

TO CONTACT US - TEL: +44(0)1279-418630 WEB: www.powerserveuk.com EMAIL: info@powerserveuk.com

All information contained in this document is confidential and the copyright reserved

Used on dwg MANUAL

P669924

Quantity D	Quantity C	Quantity B	Quantity A	No	Description	Detail No		OEM Part No
				1	ARCING CONTACT LEVER	P669008/A		771A3659Y

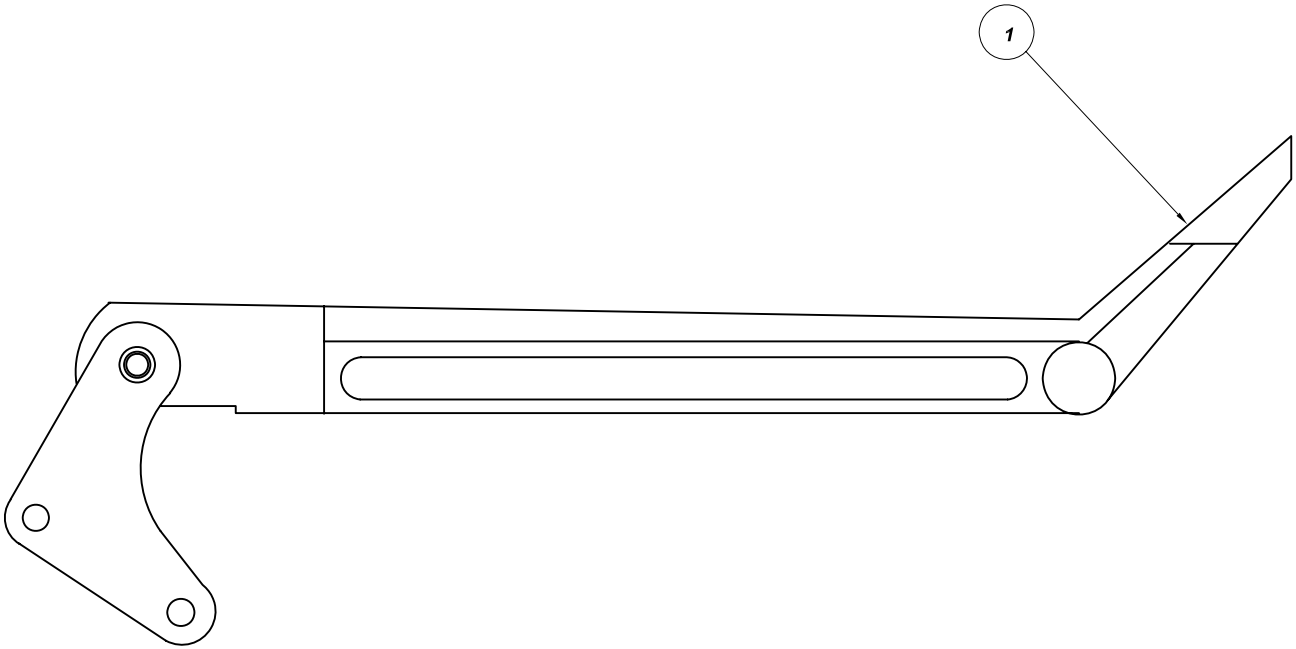

No	Revision notes	Date/Sig	No	Revision notes	Date/Sig	No	Revision notes	Date/Sig

Powerserve UK Limited
SERVING ELECTRICAL UTILITIES

TO CONTACT US
TEL: +44(0)1279-418630
FAX: +44(0)1279-210097
WEB: www.powerserveuk.com
EMAIL: info@powerserveuk.com

PATTERN PARTS
FOR REYROLLE TYPE
11S3GA SWITCHGEAR

Scale NTS | Drawn ACS | Checked AJT | Approved AJT | Date 02/03/10

RE No P669924 | REV 0

Sheet No

A	B	C	D	E	F	G	H

TO CONTACT US - TEL: +44(0)1279-418630 WEB: www.powerserveuk.com EMAIL: info@powerserveuk.com

All information contained in this document is confidential and the copyright reserved

Used on dwg MANUAL

P669925

Quantity D	Quantity C	Quantity B	Quantity A	No	Description	Detail No		OEM Part No
				1	FIXED CONTACT ASSEMBLY	P669121/A		

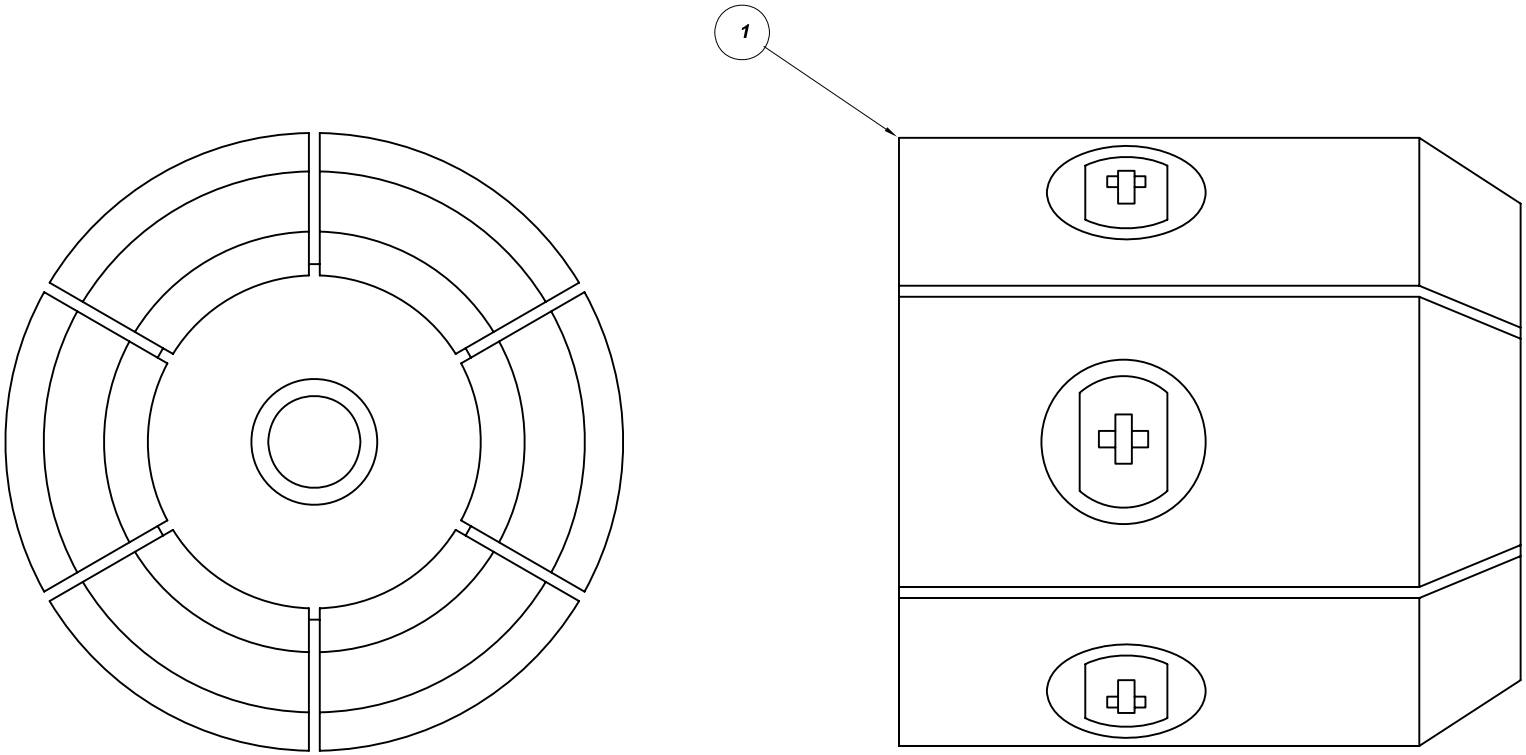

No	Revision notes	Date/Sig	No	Revision notes	Date/Sig	No	Revision notes	Date/Sig

Powerserve UK Limited
SERVING ELECTRICAL UTILITIES

Scale NTS Drawn ACS Checked AJT Approved AJT Date 02/03/10

TO CONTACT US
TEL: +44(0)1279-418630
FAX: +44(0)1279-210097
WEB: www.powerserveuk.com
EMAIL: info@powerserveuk.com

PATTERN PARTS FOR REYROLLE LMT ISOLATING CLUSTER

RE No P669925 REV 0

Sheet No

TO CONTACT US - TEL: +44(0)1279-418630 WEB: www.powerserveuk.com EMAIL: info@powerserveuk.com

All information contained in this document is confidential and the copyright reserved

Used on dwg MANUAL

P669929

Quantity D	Quantity C	Quantity B	Quantity A	No	Description	Detail No	Nat Com No	OEM Part No
				1	RETAINING PLATE	P669002/A		
				2	RUBBER BONDED VALVE PLATE (LARGE)	P669038/A		L0875S
				3	PISTON DAMPER	P669003/1		
				4	AIR RECIEVER SEAL	P669033/1		
				5	PISTON-EXHAUST&TIME DELAY VALVE	P669045/1	41-51-360	615A3794
				6	OBYR14 CORK BUFFER (INT CHAMFER)	P669035/1		L0527J
				7	CORK BUFFER	P669036/A		
				8	RUBBER BONDED VALVE PLATE (LARGE)	P669038/B		L0875S

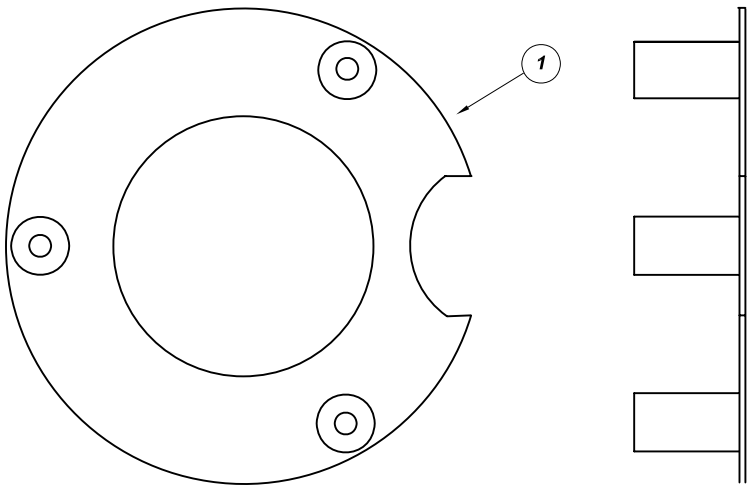

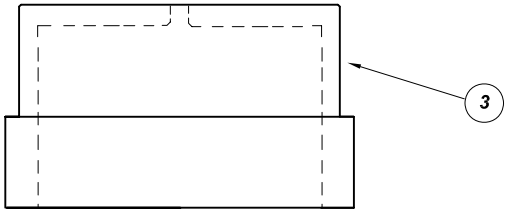

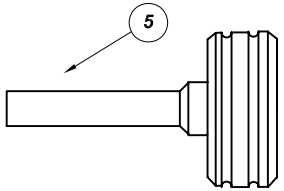

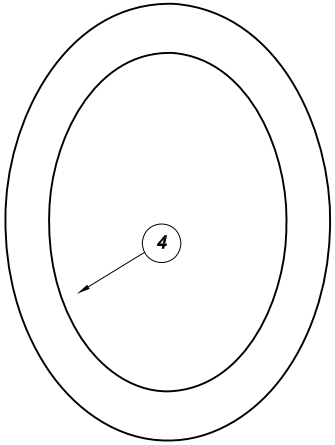

REFIRBISHED

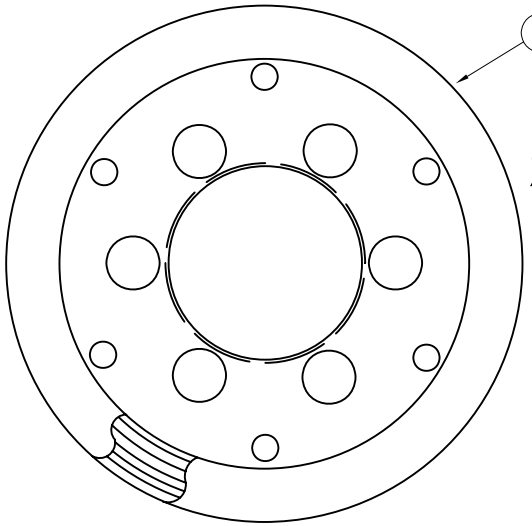

NEW- INCLUDES RING INSERT FITTED IN GROOVE ARROWED

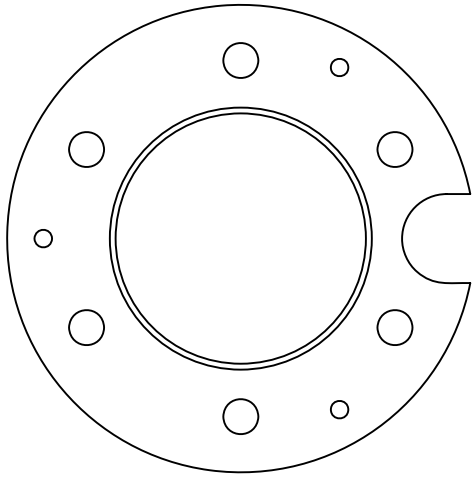

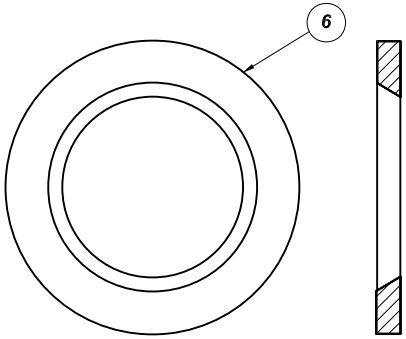

No	Revision notes	Date/Sig	No	Revision notes	Date/Sig	No	Revision notes	Date/Sig

Powerserve UK Limited
SERVING ELECTRICAL UTILITIES

TO CONTACT US
TEL: +44(0)1279-418630
FAX: +44(0)1279-210097
WEB: www.powerserveuk.com
EMAIL: info@powerserveuk.com

MISCELLANEOUS PATTERN PARTS SUITABLE FOR REYROLLE EQUIPMENT

Scale NTS | Drawn ACS | Checked AJT | Approved AJT | Date 02/03/10

RE No P669929 | REV 0

Sheet No

TO CONTACT US - TEL: +44(0)1279-418630 WEB: www.powerserveuk.com EMAIL: info@powerserveuk.com

All information contained in this document is confidential and the copyright reserved

Used on dwg MANUAL

P669931

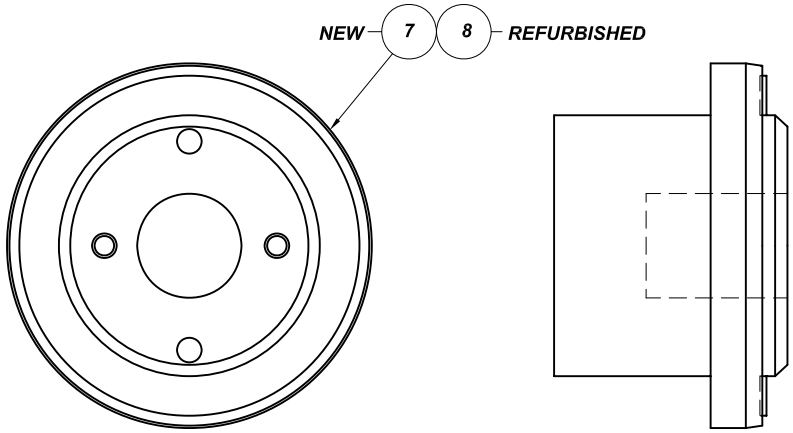

Quantity				No	Description	Detail No		OEM Part No
D	C	B	A					
				1	PLATE	P669078/A		
				2	PLATE-REFURBISHED	P669078/B		
				3	SEAL	P669079/A		
				4	SEAL-REFURBISHED	P669079/B		
				5	SEAL	P669080/A		
				6	SEAL-REFURBISHED	P669080/B		
				7	SEAL	P669081/A		
				8	SEAL-REFURBISHED	P669081/B		

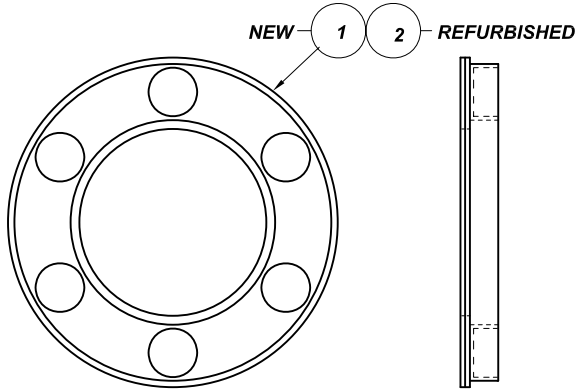

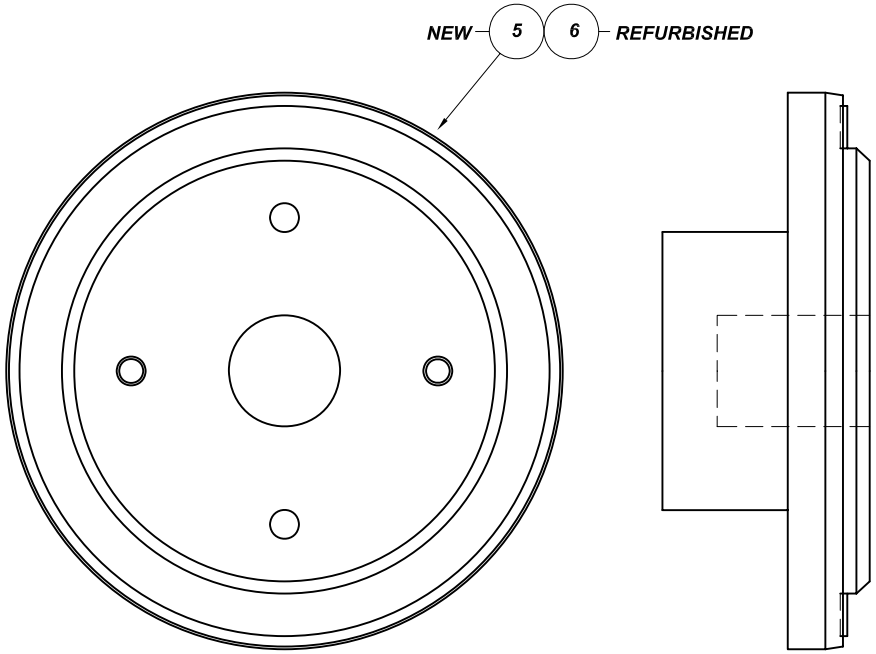

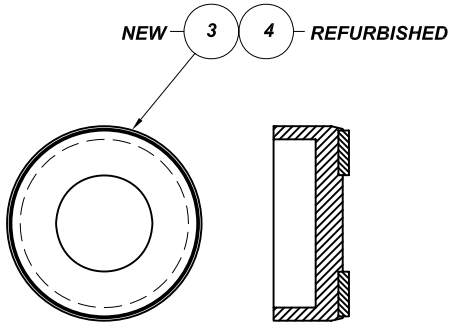

No	Revision notes	Date/Sig	No	Revision notes	Date/Sig	No	Revision notes	Date/Sig

Powerserve UK Limited
SERVING ELECTRICAL UTILITIES

TO CONTACT US
TEL: +44(0)1279-418630
FAX: +44(0)1279-210097
WEB: www.powerserveuk.com
EMAIL: info@powerserveuk.com

PATTERN PARTS
FOR REYROLLE
OBYR14 AIR BLAST BREAKER

Scale NTS | Drawn ACS | Checked AJT | Approved AJT | Date 02/03/10

RE No | Sheet No | P669931 | REV 0

Form No 3-7.3.6-A3 Rev B

TO CONTACT US - TEL: +44(0)1279-418630 WEB: www.powerserveuk.com EMAIL: info@powerserveuk.com

All information contained in this document is confidential and the copyright reserved

Used on dwg MANUAL

P669932

Quantity D	Quantity C	Quantity B	Quantity A	No	Description	Detail No		OEM Part No
				1	GASKET FOR JS UNIT	P669084/1		
				2	GASKET FOR JK UNIT	P669084/2		
				3	GASKET FOR JS UNIT	P669102/1		
				4	TEST COVER GASKET-JKSS UNIT	P669102/2		
				5	GASKET FOR JK UNIT	P669102/3		
				6	GASKET FOR JKSS UNIT	P669102/4		

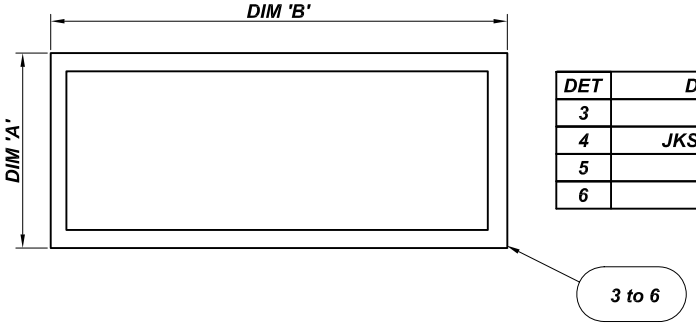

DET	DESCRIPTION	A	B
3	JS	96	470
4	JKSS TEST COVER	120	540
5	JK	152	506
6	JKSS	506	506

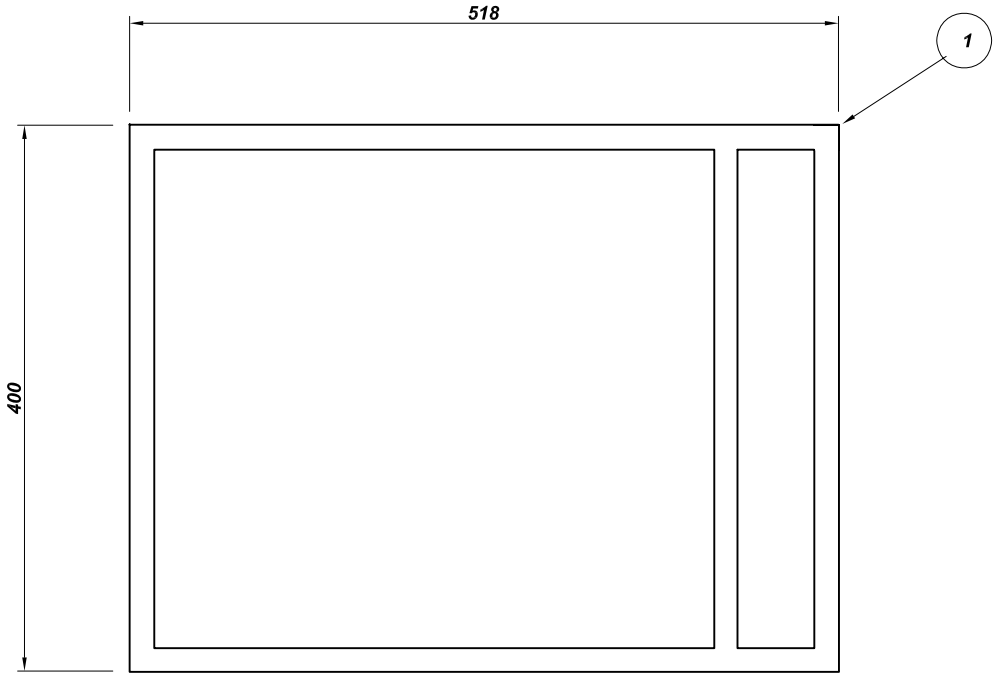

DETAIL 1 GASKET FOR TYPE JS

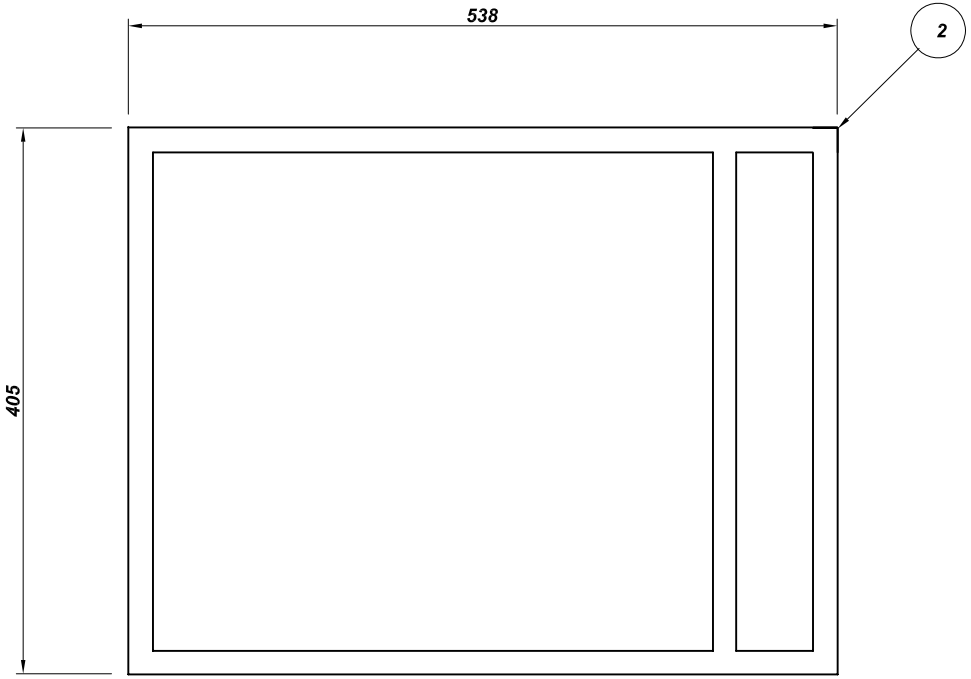

DETAIL 2 GASKET FOR TYPE JK

No	Revision notes	Date/Sig	No	Revision notes	Date/Sig	No	Revision notes	Date/Sig

Powerserve UK Limited
SERVING ELECTRICAL UTILITIES

TO CONTACT US
TEL: +44(0)1279-418630
FAX: +44(0)1279-210097
WEB: www.powerserveuk.com
EMAIL: info@powerserveuk.com

PATTERN GHASKETS
REYROLLE TYPE
JS, JK, JKSS SWITCHGEAR

Scale NTS | Drawn ACS | Checked AJT | Approved AJT | Date 02/03/10

RE No P669932 REV 0

Sheet No

TO CONTACT US - TEL: +44(0)1279-418630 WEB: www.powerserveuk.com EMAIL: info@powerserveuk.com

All information contained in this document is confidential and the copyright reserved

Used on dwg MANUAL

P669933

Quantity D	Quantity C	Quantity B	Quantity A	No	Description	Detail No		OEM Part No
				1	VENT BLOCK	P669103/1		891A1136

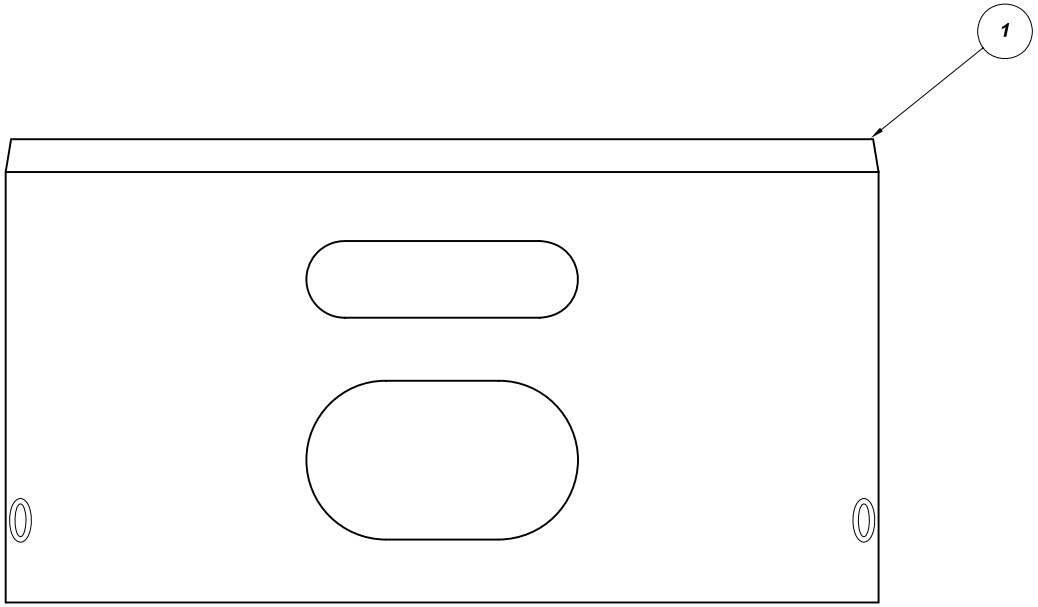

No	Revision notes	Date/Sig	No	Revision notes	Date/Sig	No	Revision notes	Date/Sig

Powerserve UK Limited
SERVING ELECTRICAL UTILITIES

TO CONTACT US
TEL: +44(0)1279-418630
FAX: +44(0)1279-210097
WEB: www.powerserveuk.com
EMAIL: info@powerserveuk.com

PATTERN VENT
BLOCK FOR REYROLLE
FOR TYPE L1000 SWITCHGEAR

Scale NTS | Drawn ACS | Checked AJT | Approved AJT | Date 02/03/10

RE No P669933 REV 0

Sheet No

Form No 3-7.3.6-A3 Rev B

TO CONTACT US - TEL: +44(0)1279-418630 WEB: www.powerserveuk.com EMAIL: info@powerserveuk.com

All information contained in this document is confidential and the copyright reserved

Used on dwg MANUAL

P669934

Quantity D	Quantity C	Quantity B	Quantity A	No	Description	Detail No		OEM Part No
				1	MOVING CONTACT BLADE	P669127/A		
				2	FIXED CONTACT CLUSTER	P669126/A		
				3	ARCING FINGER	P669129/A		
				4	FINGER	P669129/1		
				5	AUX ARCING FINGER	P669129/B		

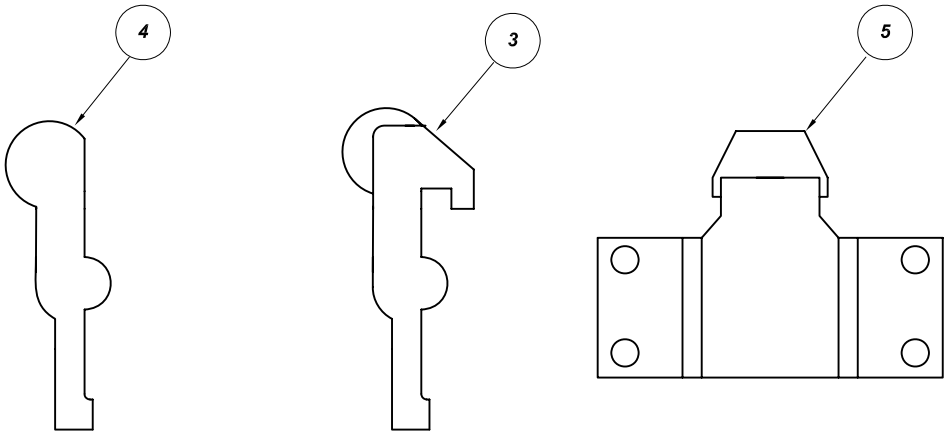

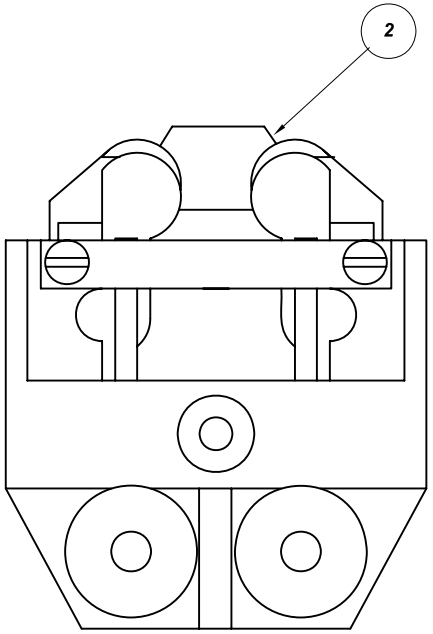

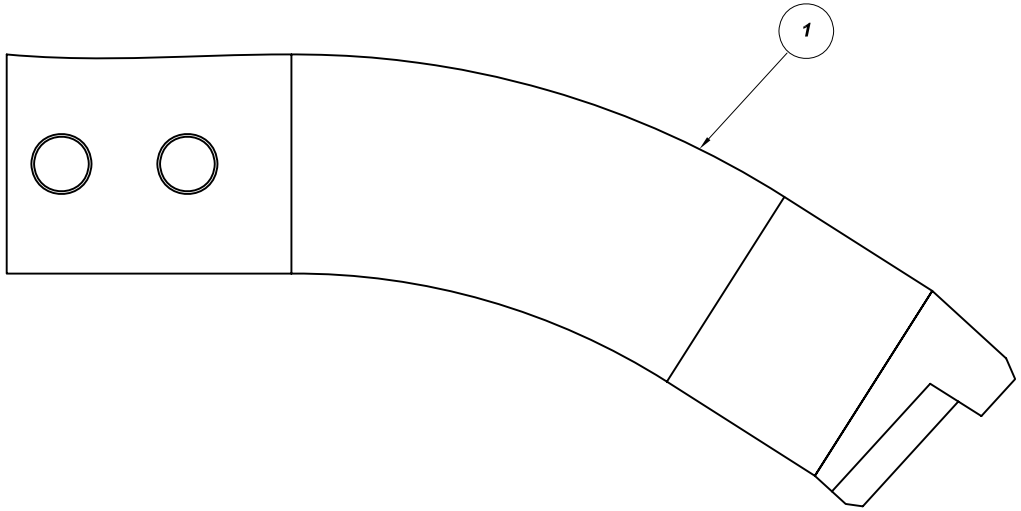

No	Revision notes	Date/Sig	No	Revision notes	Date/Sig	No	Revision notes	Date/Sig

Powerserve UK Limited
SERVING ELECTRICAL UTILITIES

TO CONTACT US
TEL: +44(0)1279-418630
FAX: +44(0)1279-210097
WEB: www.powerserveuk.com
EMAIL: info@powerserveuk.com

PATTERN FIXED AND MOVING CONTACTS AND FINGERS FOR REYROLLE LMT2 (1250A)

Scale NTS | Drawn ACS | Checked AJT | Approved AJT | Date 02/03/10

RE No P669934 | REV 0

Sheet No

TO CONTACT US - TEL: +44(0)1279-418630 WEB: www.powerserveuk.com EMAIL: info@powerserveuk.com

All information contained in this document is confidential and the copyright reserved

Used on dwg MANUAL

P710900

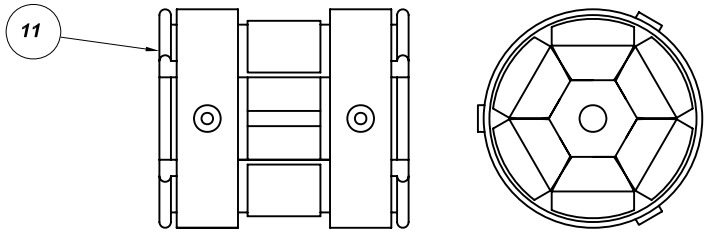

ISOLATING CLUSTER

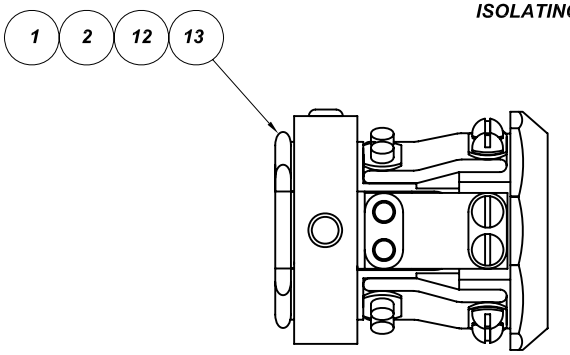

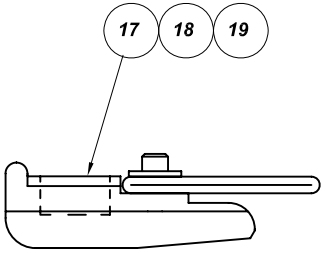

C4X FIXED CONTACT (UNPLATED BODY & FINGERS)
C6X FIXED CONTACT (PLATED BODY & FINGERS, MID RANGE FLEX)
C8X FIXED CONTACT (PLATED BODY & FINGERS, UPRATED FLEX)

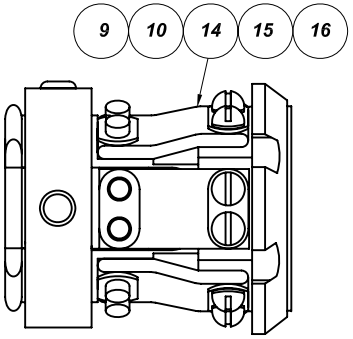

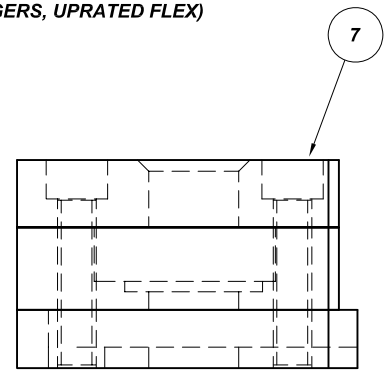

C4X3 FIXED CONTACT (UNPLATED BODY & FINGERS)
C6X3 FIXED CONTACT (PLATED BODY & FINGERS, MID RANGE FLEX)
C8X3 FIXED CONTACT (PLATED BODY & FINGERS, UPRATED FLEX)

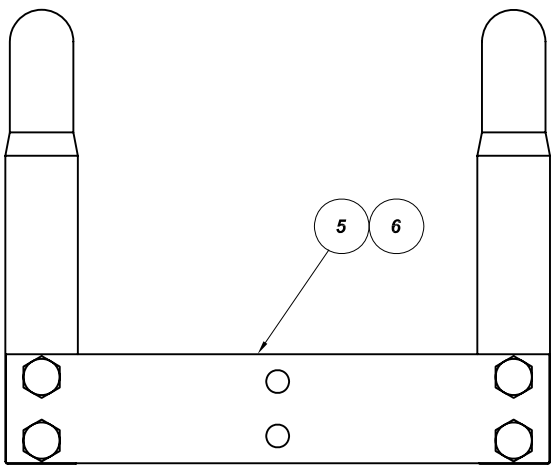

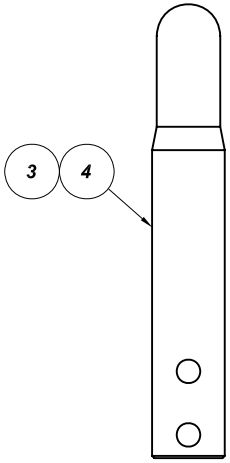

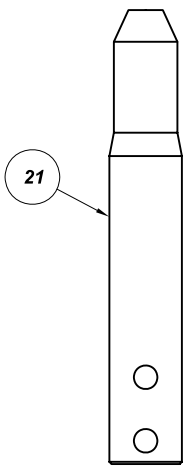

Quantity				No	Description	Detail No	Min No	OEM Part No
D	C	B	A					
			6	1	C4X FIXED CONTACT ASSEMBLY	P710016/A	885 0601	M010041/A
				2	FIXED CONTACT ASSY (LIFE EXTN)	P710016/B		
			6	3	MOVING CONTACT	P710017/1	885 0600	D30953/1
				4	MOVING CONTACT (LIFE EXTN)	P710017/B		
				5	MOVING CONTACT & ARM ASSY	P710017/C		
				6	MOVING CONTACT (EXT) & ARM ASSY	P710017/D		
				7	CROSS JET POT	P710055/A		A6600/B
				8	GASKET	P710038/1	NOT SHOWN	D50259/1
				9	C4X3 FIXED CONTACT ASSEMBLY	P710018/A		
				10	FIXED CONTACT ASSY (LIFE EXTN)	P710018/B		
				11	ISOLATING CLUSTER	P710034/A		
				12	C6X FIXED CONTACT ASSY	P710016/E		
				13	C8X FIXED CONTACT ASSY	P710016/F		
				14	C6X3 FIXED CONTACT ASSY	P710016/G		
				15	C8X3 FIXED CONTACT ASSY	P710016/H		
				16	C8X1 FIXED CONTACT ASSY	P710016/H		
				17	C4X FIXED CONTACT FINGER ASSY	P710004/A		
				18	C6X FIXED CONTACT FINGER ASSY	P710004/P		
				19	C8X FIXED CONTACT FINGER ASSY	P710004/C		
				20	C4 CONTACT (NO RING, INCL LOCK NUT)	P710016/F	SCOTTISH & SOUTHERN ONLY	
				21	C8X MOVING CONTACT	P710062/1		D30593/1

No	Revision notes	Date/Sig	No	Revision notes	Date/Sig	No	Revision notes	Date/Sig

Powerserve UK Limited
SERVING ELECTRICAL UTILITIES

TO CONTACT US
TEL: +44(0)1279-418630
FAX: +44(0)1279-210097
WEB: www.powerserveuk.com
EMAIL: info@powerserveuk.com

Scale NTS | Drawn ACS | Checked AJT | Approved AJT | Date 02/03/10

PATTER FIXED AND MOVING CONTACTS FOR SOUTH WALES TYPE C4, C6 & C8 SWITCHGEAR

RE No P710900 REV 0

Sheet No

TO CONTACT US - TEL: +44(0)1279-418630 WEB: www.powerserveuk.com EMAIL: info@powerserveuk.com

All information contained in this document is confidential and the copyright reserved

Used on dwg MANUAL

P710905

Quantity D	Quantity C	Quantity B	Quantity A	No	Description	Detail No		OEM Part No
6			6	1	D4X FIXED CONTACT	P710014/A		
	6			2	D4X3 FIXED CONTACT	P710015/A		
	6			3	D4X3 MOVING CONTACT	P710019/A		
			6	4	D4X MOVING CONTACT	P710024/A		
		6		5	D4XD MOVING CONTACT	P710025/A	BRASS	NOT SHOWN
		6		6	D4XD FIXED CONTACT	P710014/B		NOT SHOWN
6				7	D4X MOVING CONTACT TIP ONLY	P710024/1		

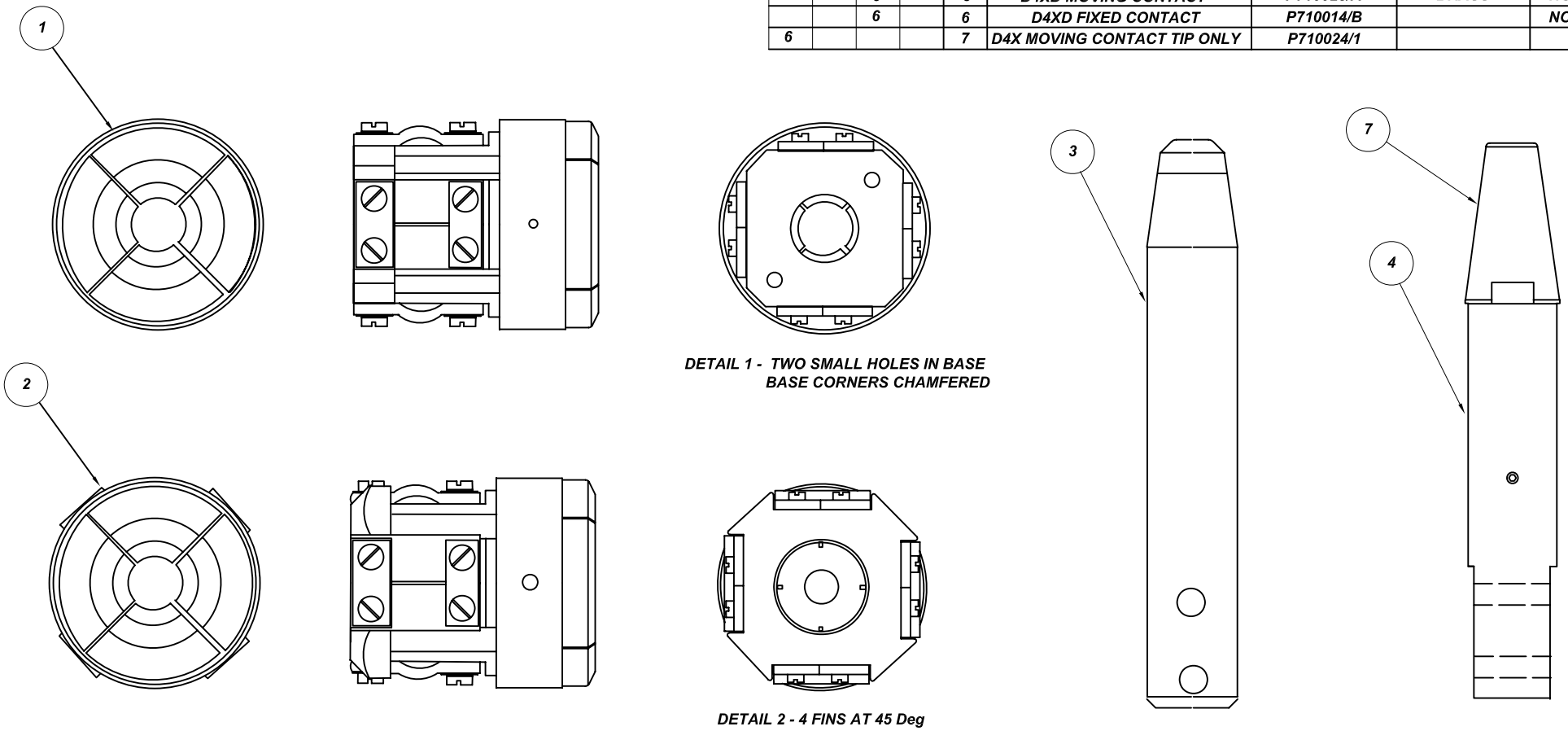

No	Revision notes	Date/Sig	No	Revision notes	Date/Sig	No	Revision notes	Date/Sig

Powerserve UK Limited
SERVING ELECTRICAL UTILITIES

TO CONTACT US
TEL: +44(0)1279-418630
FAX: +44(0)1279-210097
WEB: www.powerserveuk.com
EMAIL: info@powerserveuk.com

PATTERN FIXED AND MOVING CONTACTS FOR S.WALES SWG TYPE D4 SERIES SWITCHGEAR

Scale NTS | Drawn ACS | Checked AJT | Approved AJT | Date 02/03/10

RE No: P710905 | REV: 0

Sheet No

TO CONTACT US - TEL: +44(0)1279-418630 WEB: www.powerserveuk.com EMAIL: info@powerserveuk.com

All information contained in this document is confidential and the copyright reserved

Used on dwg MANUAL

P710906

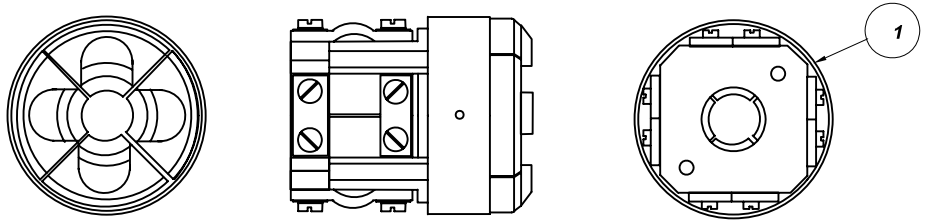

D6X3 WITH TIPPED CONTACTS AND A SINGLE FLEX

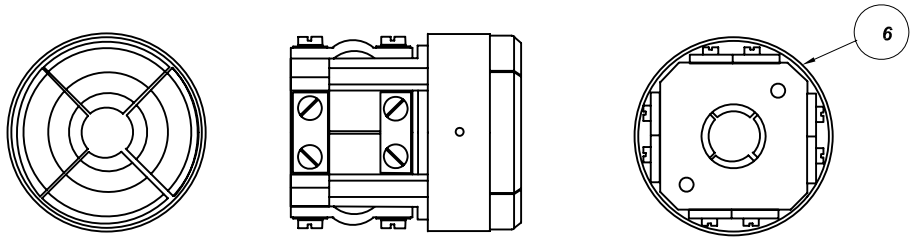

UNPLATED CONTACTS AND BODY WITH SINGLE FLEX

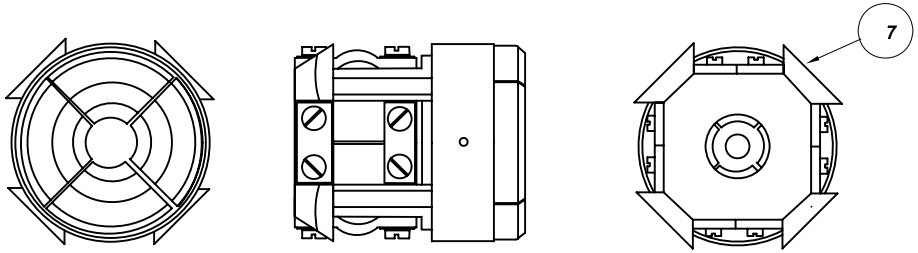

UNPLATED CONTACTS AND BODY WITH SINGLE FLEX

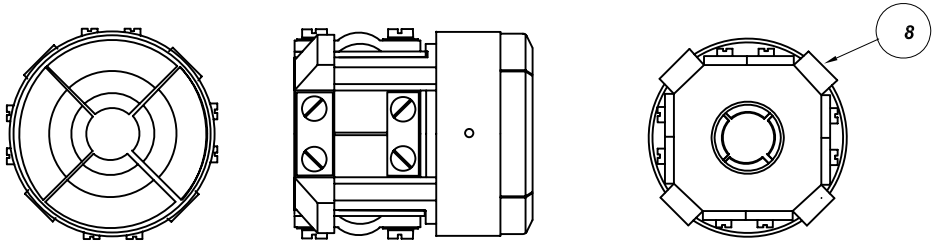

D8/12 WITH PLATED CONTACTS AND BODY AND A DOUBLE FLEX

Quantity				No	Description	Detail No		OEM Part No
D	C	B	A					
			6	1	D6X3 FIXED CONTACT	P710020/A		D23302/1
		6		2	D6X FIXED CONTACT	P710021/A	NOT SHOWN	D8019/1
		6		3	D6X MOVING CONTACT	P710022/A		
			6	4	D6X3 MOVING CONTACT	P710022/B		
				5	FIXED CONTACT	P710037/A		
				6	FIXED CONTACT	P710047/A		
				7	FIXED CONTACT	P710046/A		
	6			8	D8/12 FIXED CONTACT	P710033/A		M010208/A
	6			9	D8/12 MOVING CONTACT	P710045/1		D19519/2
				10	D4X MOVING CONTACT	P710024/A		
				11	D4XD MOVING CONTACT	P710025/1		

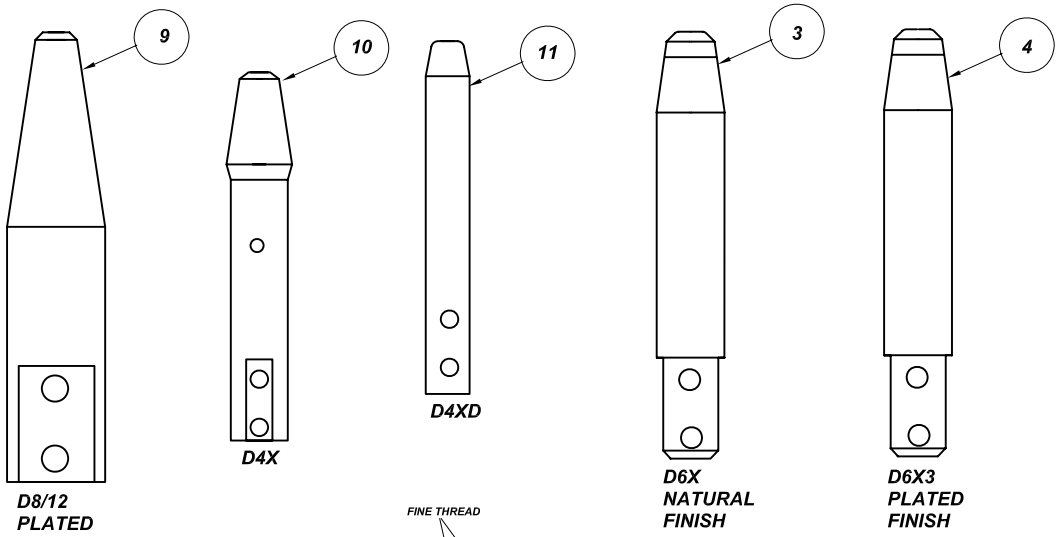

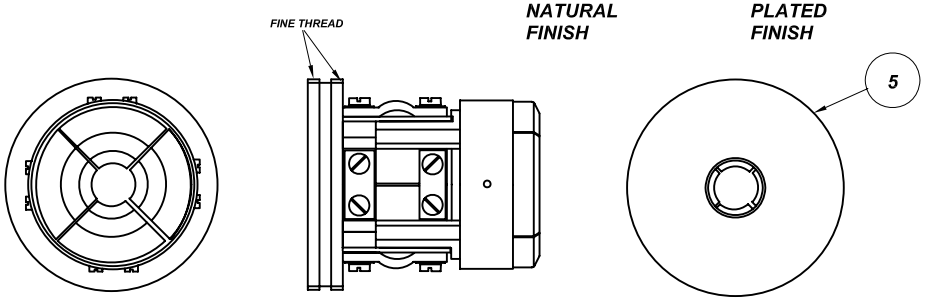

WITH PLATED CONTACTS AND BODY AND A DOUBLE FLEX

No	Revision notes	Date/Sig	No	Revision notes	Date/Sig	No	Revision notes	Date/Sig

Powerserve UK Limited
SERVING ELECTRICAL UTILITIES

TO CONTACT US
TEL: +44(0)1279-418630
FAX: +44(0)1279-210097
WEB: www.powerserveuk.com
EMAIL: info@powerserveuk.com

PATTERN FIXED AND MOVING CONTACTS FOR S.WALES SWG TYPE D SERIES SWITCHGEAR

Scale NTS | Drawn ACS | Checked AJT | Approved AJT | Date 02/03/10

RE No | Sheet No | P710906 | REV 0

Form No 3-7.3.6-A3 Rev B

TO CONTACT US - TEL: +44(0)1279-418630 WEB: www.powerserveuk.com EMAIL: info@powerserveuk.com

All information contained in this document is confidential and the copyright reserved

Used on dwg MANUAL

P710917

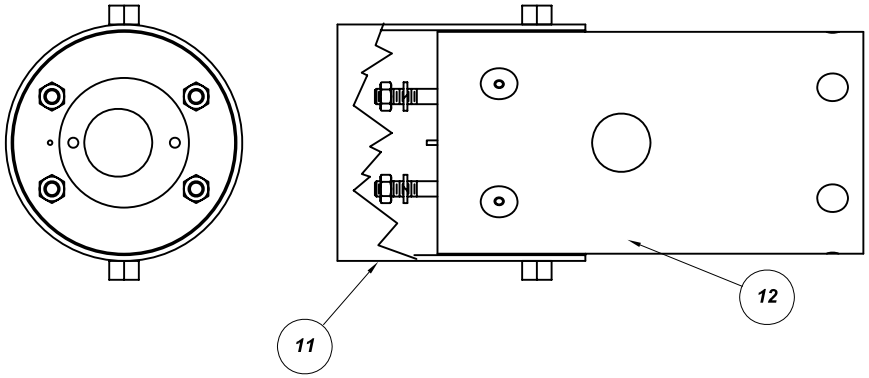

Quantity D	Quantity C	Quantity B	Quantity A	No	Description	Detail No		OEM Part No
			6	1	FIXED CONTACT-STANDARD	P710001/A		M010313/B
		6		2	FIXED CONTACT-RETIP	P710001/C		
	6			3	FIXED CONTACT-REFIRBISHED	P710001/E		
6				4	FIXED CONTACT-REFIRB-RETIP	P710001/G		
	6		6	5	MOVING CONTACT-STANDARD	P710003/1		C16035/2
6		6		6	FIXED CONTACT-RETIP	P710003/A		
				7	CONTACT FINGER-STANDARD	P710004/B		
				8	CONTACT FINGER-RETIP	P710004/E		
				9	CONTACT FINGER-REFIRB	P710004/H		
				10	CONTACT FINGER-REFIRB-RETIP	P710004/L		
				11	SHROUD	P558009/1		
				12	TURBULATOR ASSEMBLY	P710031/A		

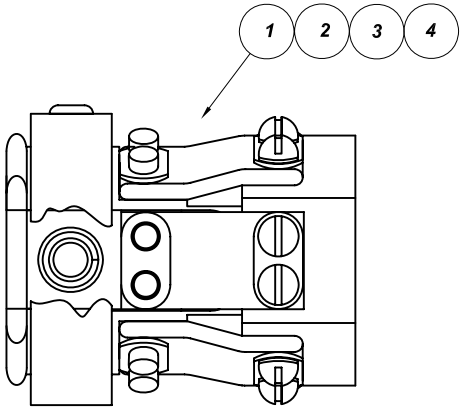

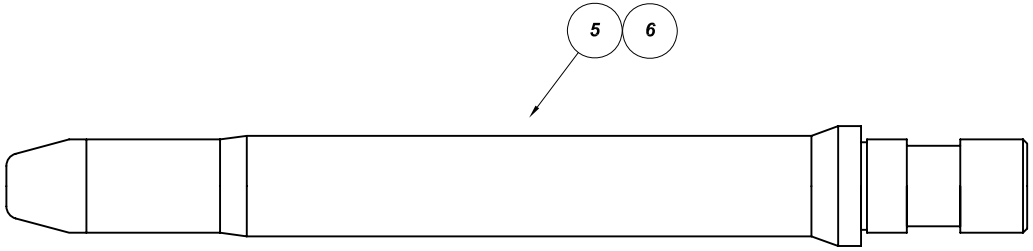

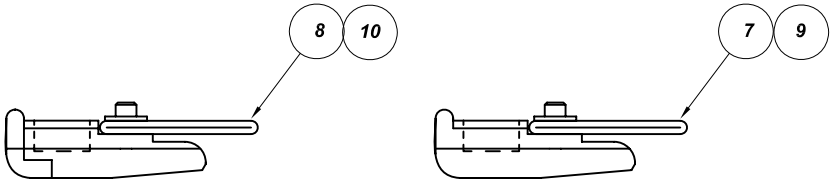

NOTE
GROUP A = STANDARD PATTERN (SILVER PLATED)
GROUP B = EXTENDED LIFE (SILVER PLATED)
GROUP C = STANDARD PATTERN (SILVER PLATED) - REFIRBISHED
GROUP D = EXTENDED LIFE (SILVER PLATED) - REFIRBISHED

No	Revision notes	Date/Sig	No	Revision notes	Date/Sig	No	Revision notes	Date/Sig

Powerserve UK Limited
SERVING ELECTRICAL UTILITIES

TO CONTACT US
TEL: +44(0)1279-418630
FAX: +44(0)1279-210097
WEB: www.powerserveuk.com
EMAIL: info@powerserveuk.com

PATTERN FIXED AND MOVING CONTACTS FOR S.WALES SWGR TYPE EO1 800/1200A SWGR

Scale NTS | Drawn AVS | Checked AJT | Approved AJT | Date 02/03/10

RE No | Sheet No | P710917 | REV 0

Form No 3-7.3.6-A3 Rev B

TO CONTACT US - TEL: +44(0)1279-418630 WEB: www.powerserveuk.com EMAIL: info@powerserveuk.com

All information contained in this document is confidential and the copyright reserved

Used on dwg MANUAL

P710920

Quantity D	Quantity C	Quantity B	Quantity A	No	Description	Detail No		OEM Part No
				1	FIXED CONTACT ASSEMBLY	P710068/A		
				2	MOVING CONTACT BODY	P710067/1		
				3	MOVING CONTACT TIP	P710067/2		
				4	FIXED CONTACT FINGER	P710004/C		

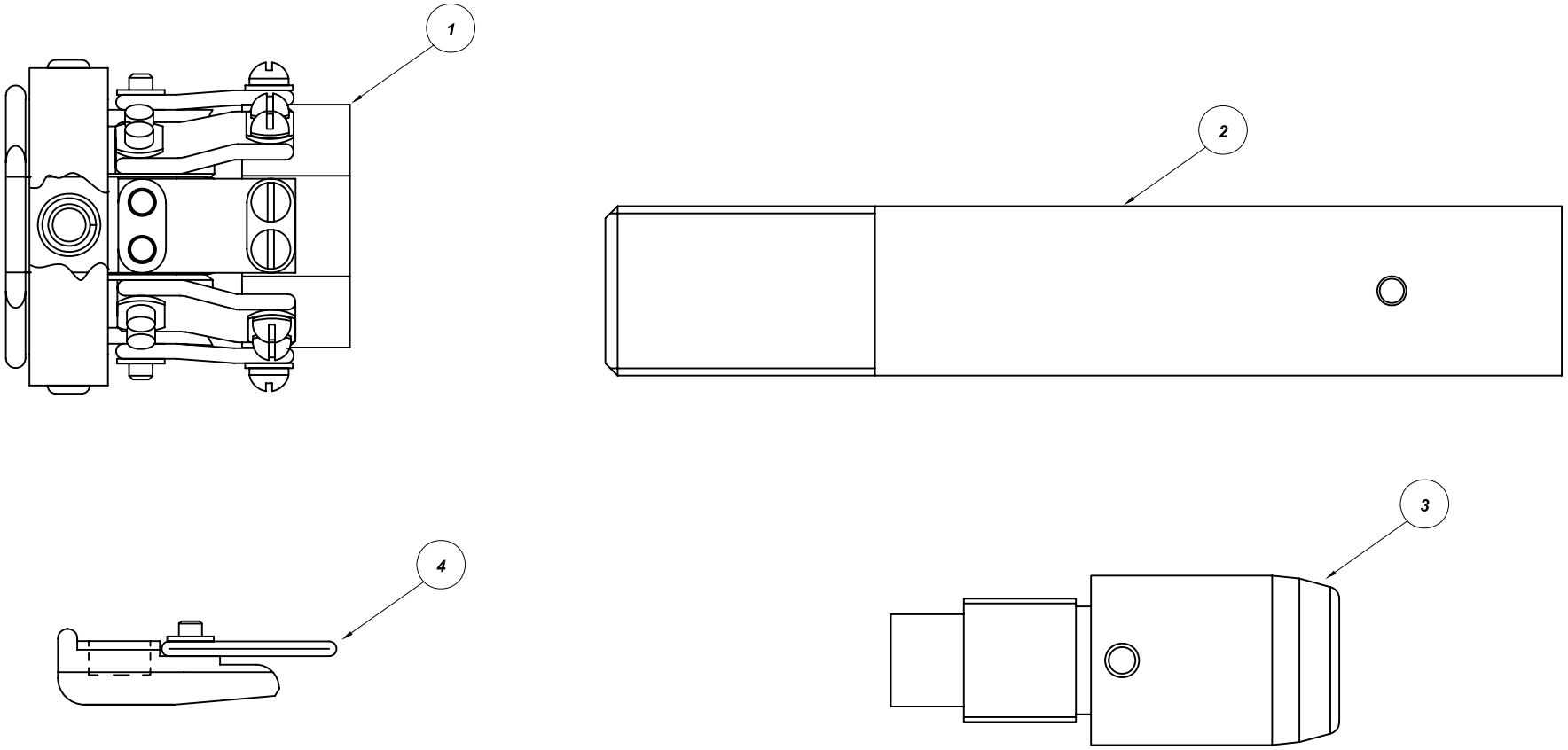

No	Revision notes	Date/Sig	No	Revision notes	Date/Sig	No	Revision notes	Date/Sig

Powerserve UK Limited
SERVING ELECTRICAL UTILITIES

TO CONTACT US
TEL: +44(0)1279-418630
FAX: +44(0)1279-210097
WEB: www.powerserveuk.com
EMAIL: info@powerserveuk.com

Scale NTS | Drawn ACS | Checked AJT | Approved AJT | Date 02/03/10

PATTERN FIXED AND MOVING CONTACTS FOR S.WALES SWGR TYPE EO1 1600A SWITCHGEAR

RE No P710920 REV 0

Sheet No

TO CONTACT US - TEL: +44(0)1279-418630 WEB: www.powerserveuk.com EMAIL: info@powerserveuk.com

All information contained in this document is confidential and the copyright reserved

Used on dwg MANUAL

P710921

Quantity D	Quantity C	Quantity B	Quantity A	No	Description	Detail No		OEM Part No
				1	FIXED CONTACT ASSEMBLY	P710066/A		
				2	MOVING CONTACT	P710065/1		
				3	FIXED CONTACT FINGER	P710004/B		

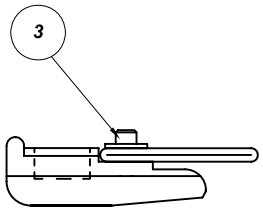

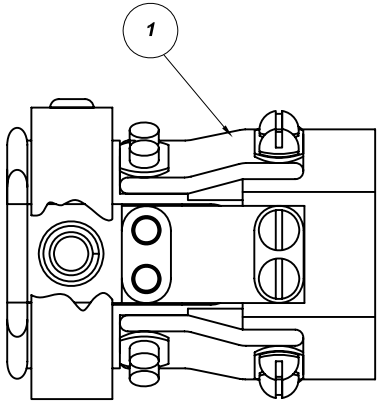

No	Revision notes	Date/Sig	No	Revision notes	Date/Sig	No	Revision notes	Date/Sig

Powerserve UK Limited
SERVING ELECTRICAL UTILITIES

TO CONTACT US
TEL: +44(0)1279-418630
FAX: +44(0)1279-210097
WEB: www.powerserveuk.com
EMAIL: info@powerserveuk.com

PATTERN FIXED AND MOVING CONTACTS FOR S.WALES SWGR TYPE EM12 SWITCHGEAR

Scale NTS | Drawn ACS | Checked AJT | Approved AJT | Date 02/03/10

RE No P710921 | REV 0

Sheet No

TO CONTACT US - TEL: +44(0)1279-418630 WEB: www.powerserveuk.com EMAIL: info@powerserveuk.com

All information contained in this document is confidential and the copyright reserved

Used on dwg MANUAL

P712902

Quantity D	Quantity C	Quantity B	Quantity A	No	Description	Detail No		OEM Part No
				1	MOVING CONTACT	P712001/1		
				2	FIXED CONTACT	P712002/1		
				3	FIXED CONTACT ASSEMBLY	P712005/A		

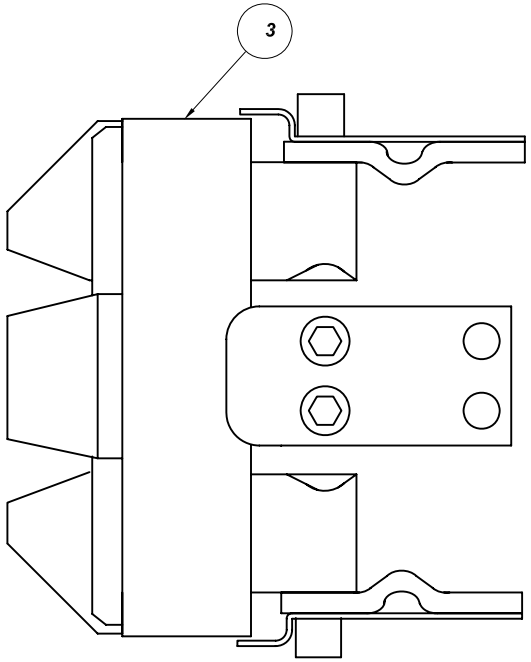

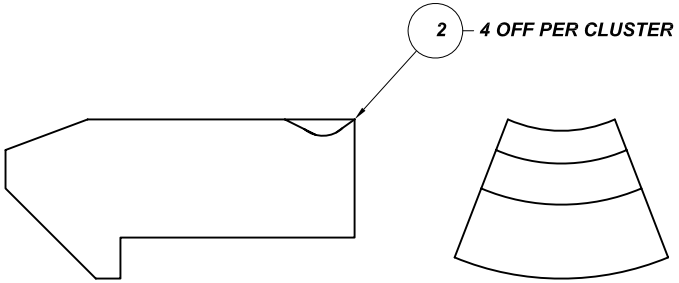

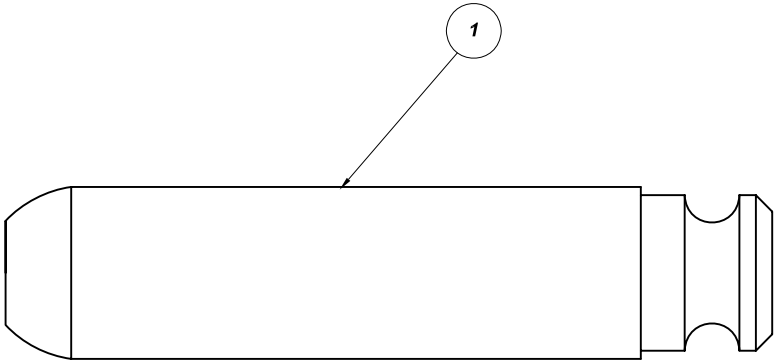

No	Revision notes	Date/Sig	No	Revision notes	Date/Sig	No	Revision notes	Date/Sig

Powerserve UK Limited
SERVING ELECTRICAL UTILITIES

TO CONTACT US
TEL: +44(0)1279-418630
FAX: +44(0)1279-210097
WEB: www.powerserveuk.com
EMAIL: info@powerserveuk.com

COMPATABLE FIXED & MOVING CONTACTS FOR SWITCHGEAR & COWAN TYPE A51 SWITCHGEAR

Scale NTS | Drawn ACS | Checked AJT | Approved AJT | Date 02/03/10

RE No | Sheet No | P712902 | REV 0

TO CONTACT US - TEL: +44(0)1279-418630 WEB: www.powerserveuk.com EMAIL: info@powerserveuk.com

All information contained in this document is confidential and the copyright reserved

Used on dwg MANUAL

P712903

Quantity D	Quantity C	Quantity B	Quantity A	No	Description	Detail No		OEM Part No
				1	MOVING CONTACT (TIPPED)	P712001/A		
				2	FIXED CONTACT	P712002/1		
				3	FIXED CONTACT (TIPPED)	P712002/A		
				4	FIXED CONTACT ASSEMBLY	P712005/B		

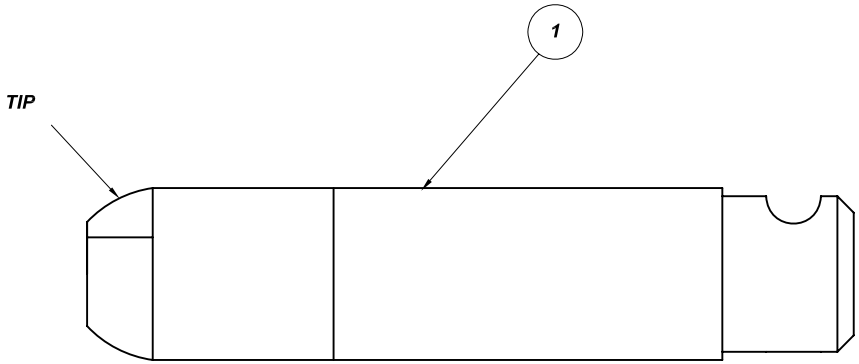

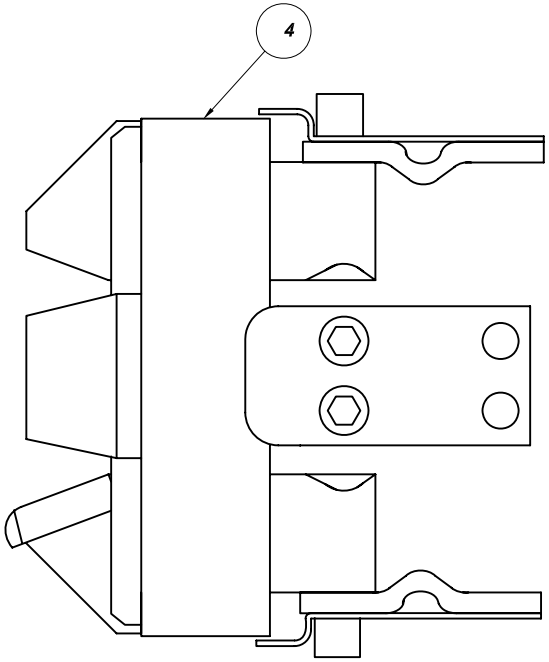

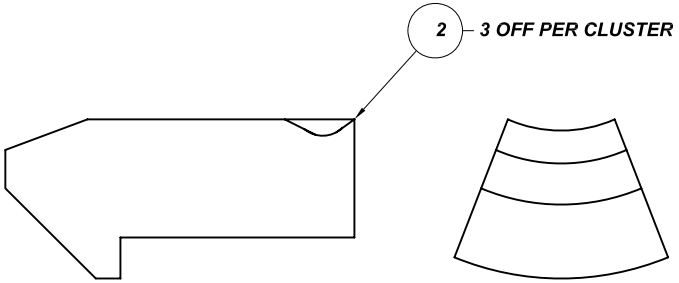

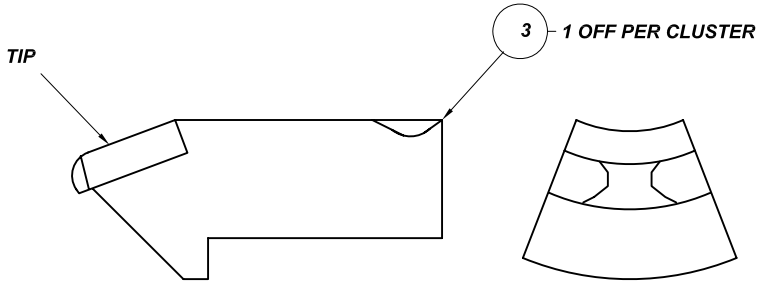

No	Revision notes	Date/Sig	No	Revision notes	Date/Sig	No	Revision notes	Date/Sig

Powerserve UK Limited
SERVING ELECTRICAL UTILITIES

TO CONTACT US
TEL: +44(0)1279-418630
FAX: +44(0)1279-210097
WEB: www.powerserveuk.com
EMAIL: info@powerserveuk.com

PATTERN FIXED AND MOVING CONTACTS FOR SWITCHGEAR & COWAN TYPE A71 SWITCHGEAR

Scale NTS | Drawn ACS | Checked AJT | Approved AJT | Date 02/03/10

RE No | Sheet No | P712903 | REV 0

Form No 3-7.3.6-A3 Rev B

TO CONTACT US - TEL: +44(0)1279-418630 WEB: www.powerserveuk.com EMAIL: info@powerserveuk.com

All information contained in this document is confidential and the copyright reserved

Used on dwg MANUAL

P712905

Quantity D	Quantity C	Quantity B	Quantity A	No	Description	Detail No		OEM Part No
				1	FIXED CONTACT-LARGE	P712003/A		
				2	FIXED CONTACT-SMALL	P712003/B		
				3	MOVING CONTACT	P712007/A		

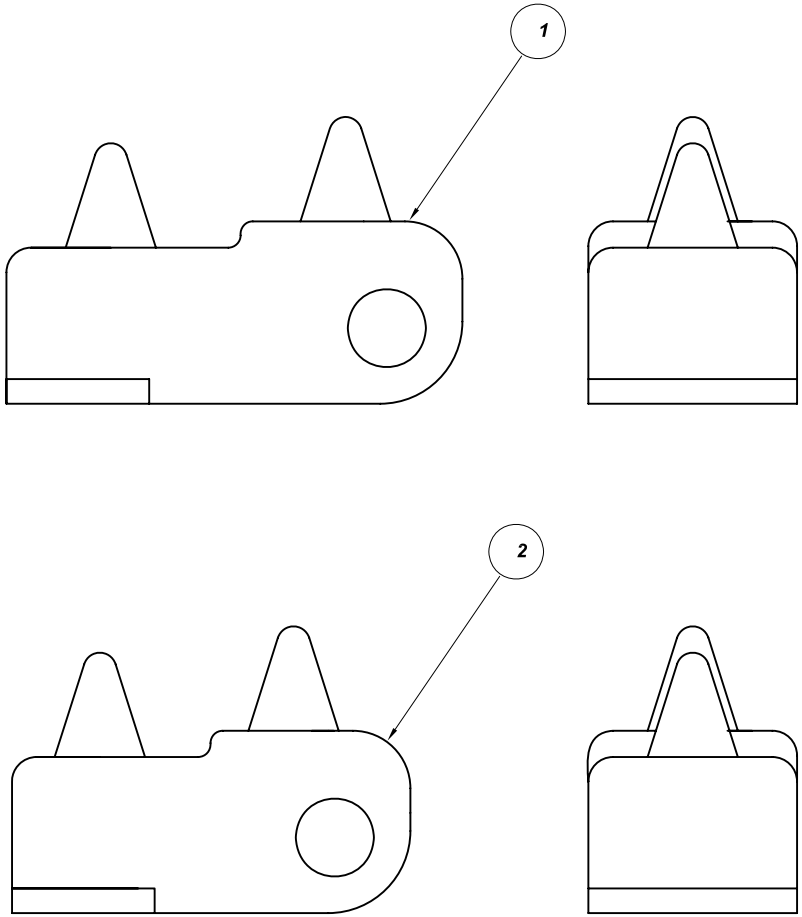

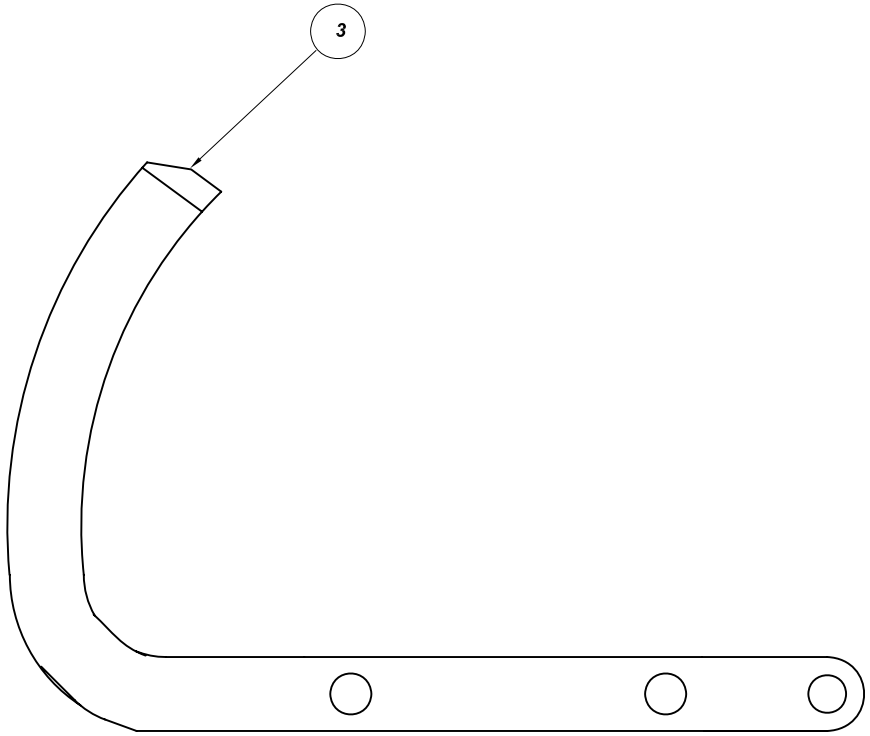

No	Revision notes	Date/Sig	No	Revision notes	Date/Sig	No	Revision notes	Date/Sig

Powerserve UK Limited
SERVING ELECTRICAL UTILITIES

TO CONTACT US
TEL: +44(0)1279-418630
FAX: +44(0)1279-210097
WEB: www.powerserveuk.com
EMAIL: info@powerserveuk.com

PATTERN FIXED & MOVING CONTACTS FOR SWITCHGEAR COWAN TYPE A4 SWITCHGEAR

Scale NTS | Drawn ACS | Checked AJT | Approved AJT | Date 02/03/10

RE No | Sheet No | P712905 | REV 0

TO CONTACT US - TEL: +44(0)1279-418630 WEB: www.powerserveuk.com EMAIL: info@powerserveuk.com

All information contained in this document is confidential and the copyright reserved

Used on dwg MANUAL

P715903

Quantity D	Quantity C	Quantity B	Quantity A	No	Description	Detail No		OEM Part No
				1	FIXED CONTACT ASSEMBLY	P715001/A		
				2	MOVING CONTACT	P715002/1		

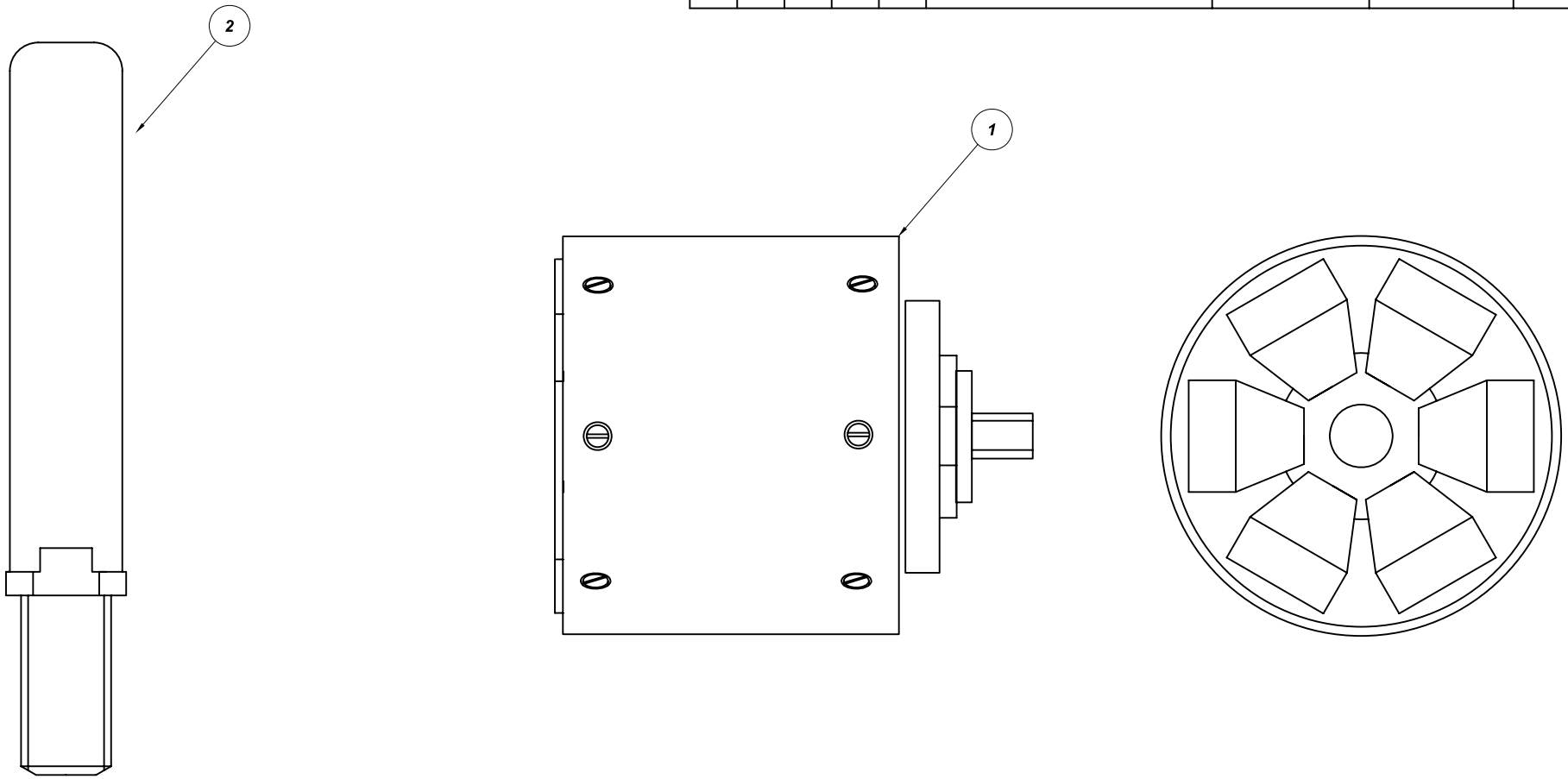

No	Revision notes	Date/Sig	No	Revision notes	Date/Sig	No	Revision notes	Date/Sig

Powerserve UK Limited
SERVING ELECTRICAL UTILITIES

TO CONTACT US
TEL: +44(0)1279-418630
FAX: +44(0)1279-210097
WEB: www.powerserveuk.com
EMAIL: info@powerserveuk.com

PATTERN FIXED & MOVING CONTACTS FOR J G STATTER TYPE ACO1 SWITCHGEAR

Scale NTS | Drawn ACS | Checked AJT | Approved AJT | Date 10/03/10

RE No | Sheet No | P715903 | REV 0

TO CONTACT US - TEL: +44(0)1279-418630 WEB: www.powerserveuk.com EMAIL: info@powerserveuk.com

All information contained in this document is confidential and the copyright reserved

Used on dwg MANUAL

P715904

Quantity D	Quantity C	Quantity B	Quantity A	No	Description	Detail No		OEM Part No
			1	1	SUPPORT BOARD	P715008/1		
			1	2	SUPPORT BOARD	P715008/2		
			2	3	SUPPORT BOARD	P715008/3		
			2	4	SUPPORT BOARD	P715008/4		

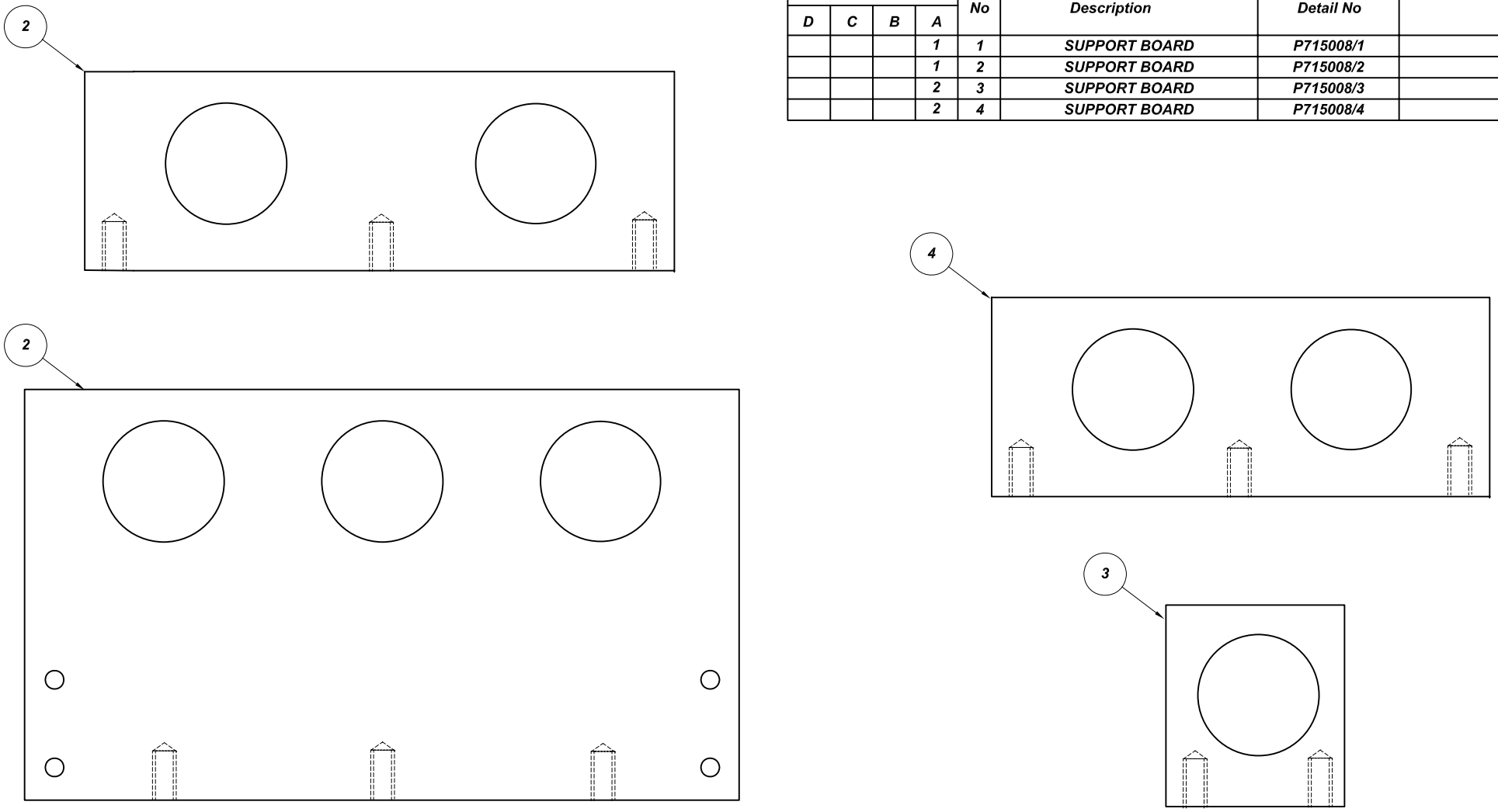

No	Revision notes	Date/Sig	No	Revision notes	Date/Sig	No	Revision notes	Date/Sig

Form No 3-7.3.6-A3 Rev B

Powerserve UK Limited
SERVING ELECTRICAL UTILITIES

TO CONTACT US
TEL: +44(0)1279-418630
FAX: +44(0)1279-210097
WEB: www.powerserveuk.com
EMAIL: info@powerserveuk.com

Scale NTS | Drawn ACS | Checked AJT | Approved AJT | Date 10/03/10

PATTERN SUPPORT BOARDS FOR J G STATTER TYPE AC01 SWITCHGEAR

RE No P715904 REV 0

Sheet No

TO CONTACT US - TEL: +44(0)1279-418630 WEB: www.powerserveuk.com EMAIL: info@powerserveuk.com

All information contained in this document is confidential and the copyright reserved

Used on dwg MANUAL

P715905

Quantity D	Quantity C	Quantity B	Quantity A	No	Description	Detail No		OEM Part No
			1	1	TRIP LEVER	P558032/1		
			3	2	SUPPORT ROD	P715009/1		
		1		3	TRIP LEVER SUPPORT BRACKET	P715011/1		
		1		4	ROTOR STOP	P715011/2		
				5	ROTOR STOP DRILL JIG	P715011/A		
			3	6	SCROLL PIN			
			3	7	SPLIT PIN			

GROUP A = ONE SET OF OPERATING RODS AND LEVER
GROUP B = ONE MODIFICATION KIT

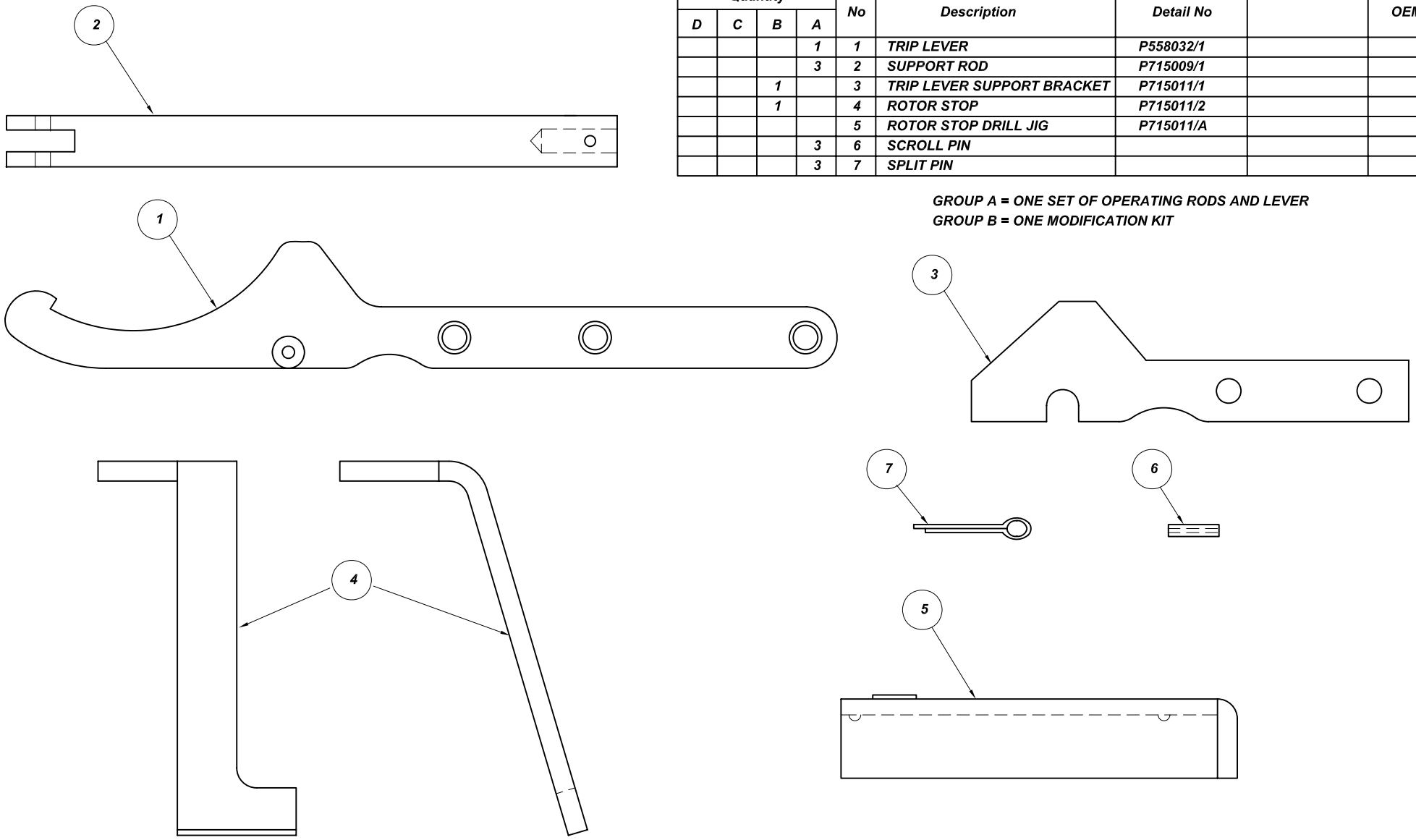

No	Revision notes	Date/Sig	No	Revision notes	Date/Sig	No	Revision notes	Date/Sig

Powerserve UK Limited
SERVING ELECTRICAL UTILITIES

TO CONTACT US
TEL: +44(0)1279-418630
FAX: +44(0)1279-210097
WEB: www.powerserveuk.com
EMAIL: info@powerserveuk.com

Scale NTS | Drawn ACS | Checked AJT | Approved AJT | Date 10/03/10

PATTERN PARTS FOR
TYPE TYKE IIa & FSA
FUSE SWITCH MODIFICATIONS

RE No | Sheet No | P715905 | REV 0

TO CONTACT US - TEL: +44(0)1279-418630 WEB: www.powerserveuk.com EMAIL: info@powerserveuk.com

All information contained in this document is confidential and the copyright reserved

Used on dwg MANUAL

P715906

Quantity D	Quantity C	Quantity B	Quantity A	No	Description	Detail No		OEM Part No
				1	TOP COVER GASKET	P715012/1		

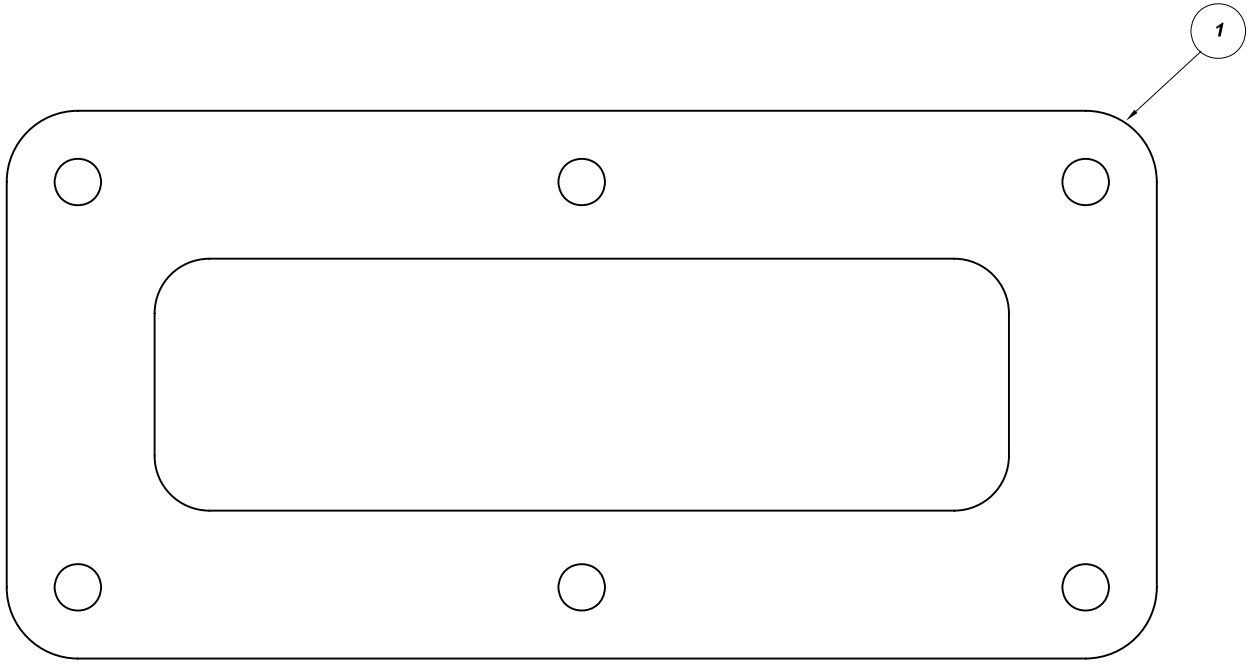

No	Revision notes	Date/Sig	No	Revision notes	Date/Sig	No	Revision notes	Date/Sig

Powerserve UK Limited
SERVING ELECTRICAL UTILITIES

Scale NTS Drawn ACS Checked AJT Approved AJT Date 10/03/10

TO CONTACT US
TEL: +44(0)1279-418630
FAX: +44(0)1279-210097
WEB: www.powerserveuk.com
EMAIL: info@powerserveuk.com

PATTERN TOP COVER GASKET FOR J G STATTER OD, SA & VL EQUIPMENT

RE No P715906 REV 0

Sheet No

TO CONTACT US - TEL: +44(0)1279-418630 WEB: www.powerserveuk.com EMAIL: info@powerserveuk.com

All information contained in this document is confidential and the copyright reserved

Used on dwg MANUAL

P715907

Quantity D	Quantity C	Quantity B	Quantity A	No	Description	Detail No		OEM Part No
				1	SIGHT GLASS - STEPPED	P715013/1		
				2	SIGHT GLASS	P715013/2		
				3	SIGHT GLASS GASKET	P715013/3		
				4	SIGHT GLASS GASKET	P715013/4		
				5	SIGHT GLASS GASKET	P715013/5		
				6	SIGHT GLASS	P715013/6		

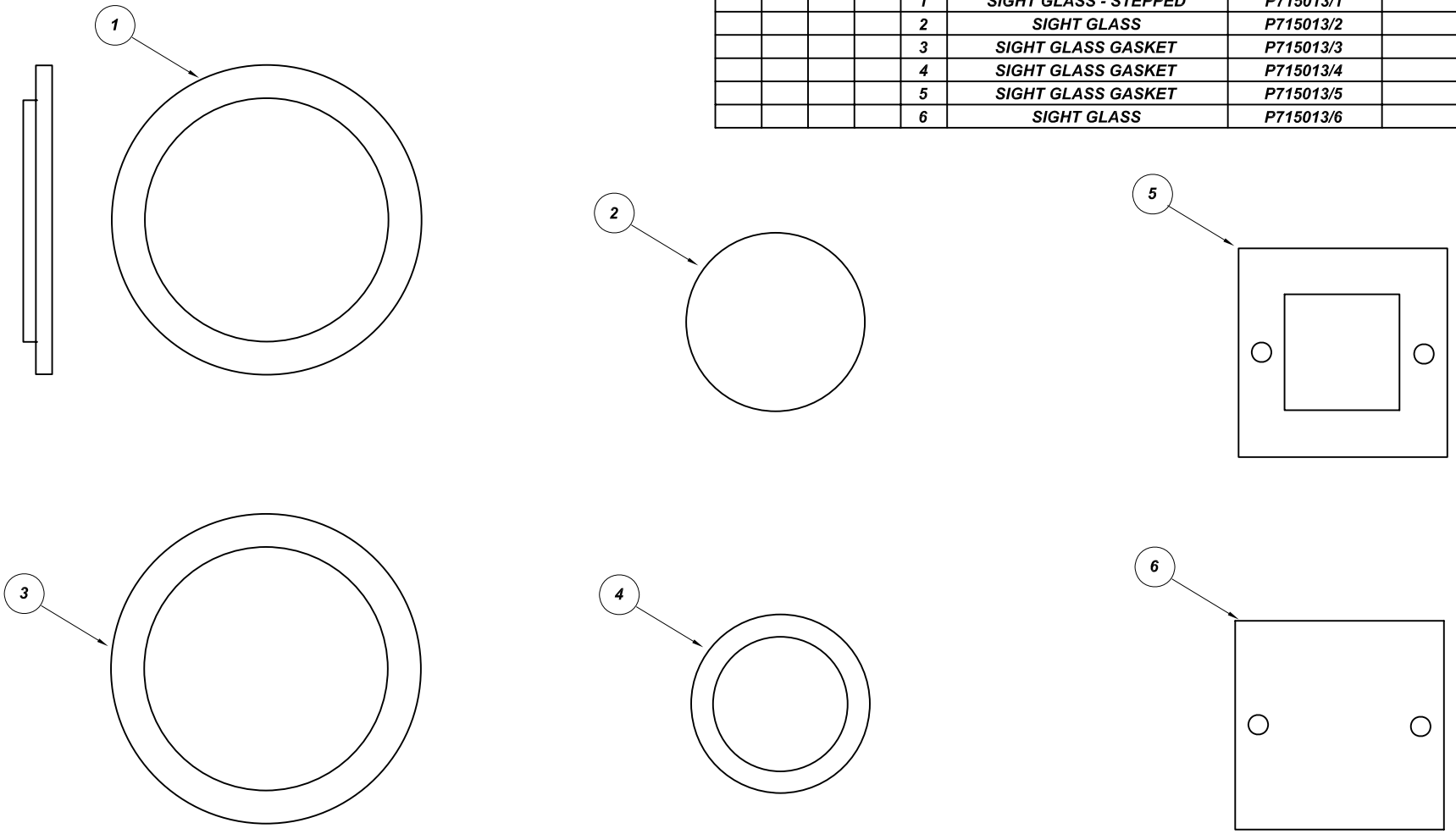

No	Revision notes	Date/Sig	No	Revision notes	Date/Sig	No	Revision notes	Date/Sig

Powerserve UK Limited
SERVING ELECTRICAL UTILITIES

TO CONTACT US
TEL: +44(0)1279-418630
FAX: +44(0)1279-210097
WEB: www.powerserveuk.com
EMAIL: info@powerserveuk.com

Scale NTS Drawn ACS Checked AJT Approved AJT Date 10/03/10

PATTERN SIGHT GLASSES AND GASKETS FOR JG STATTER TYPE VL GEAR

RE No P715907 REV 0

Sheet No

TO CONTACT US - TEL: +44(0)1279-418630 WEB: www.powerserveuk.com EMAIL: info@powerserveuk.com

All information contained in this document is confidential and the copyright reserved

Used on dwg MANUAL

P830901

Quantity D	Quantity C	Quantity B	Quantity A	No	Description	Detail No		OEM Part No
				1	1st STAGE VALVE ASSEMBLY	P830002/A		
				2	2nd STAGE VALVE ASSEMBLY	P830002/B		

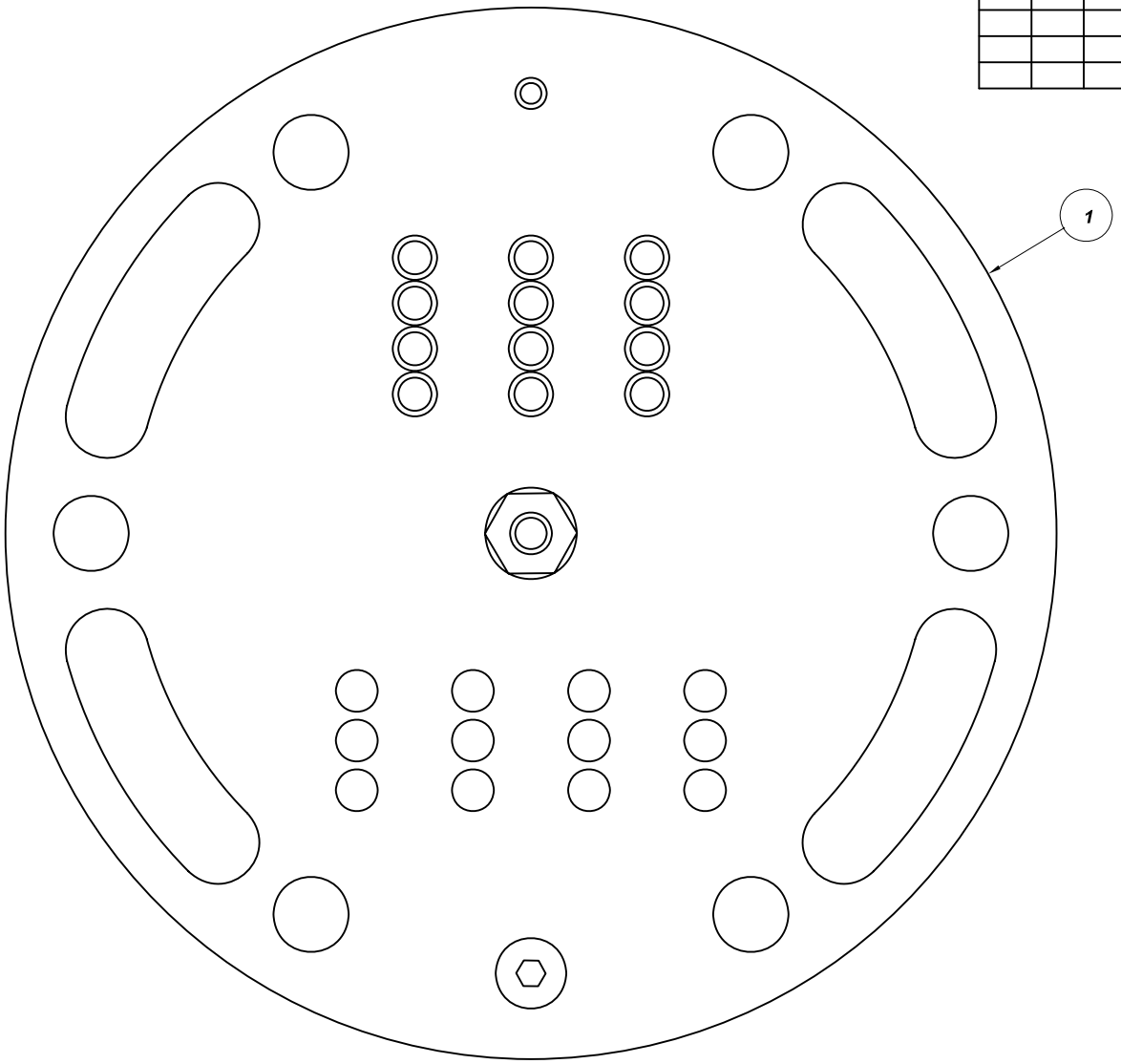

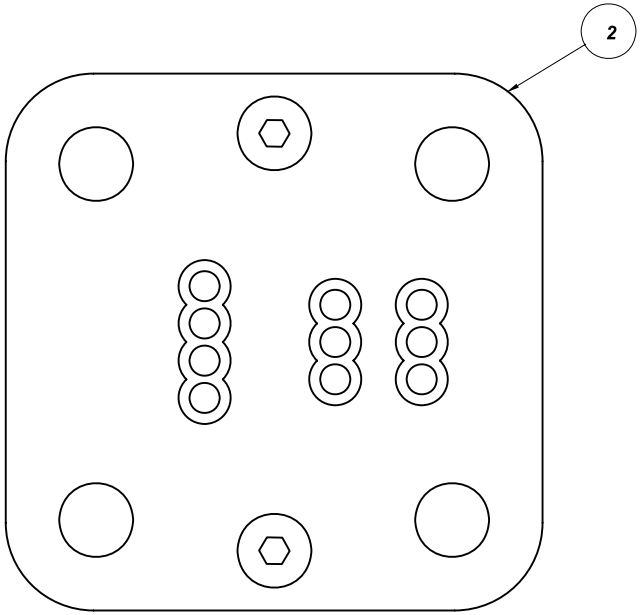

No	Revision notes	Date/Sig	No	Revision notes	Date/Sig	No	Revision notes	Date/Sig

Powerserve UK Limited
SERVING ELECTRICAL UTILITIES

TO CONTACT US
TEL: +44(0)1279-418630
FAX: +44(0)1279-210097
WEB: www.powerserveuk.com
EMAIL: info@powerserveuk.com

PATTERN WILLIAM & JAMES
1st AND 2nd STAGE
VALVE PLATE ASSEMBLIES

Scale NTS | Drawn ACS | Checked AJT | Approved AJT | Date 10/03/10

RE No P830901 | REV 0

Sheet No

Form No 3-7.3.6-A3 Rev B

TO CONTACT US - TEL: +44(0)1279-418630 WEB: www.powerserveuk.com EMAIL: info@powerserveuk.com

All information contained in this document is confidential and the copyright reserved

Used on dwg MANUAL

P872901

Quantity D	Quantity C	Quantity B	Quantity A	No	Description	Detail No		OEM Part No
				1	FIXED REAR SHORT CONTACT	P872004/A		
				2	FIXED FRONT LONG CONTACT	P872004/B		
				3	MOVING CONTACT ASSEMBLY	P872003/A		
				4	CONTACT FINGER (INC SPRINGS)	P872005/A		

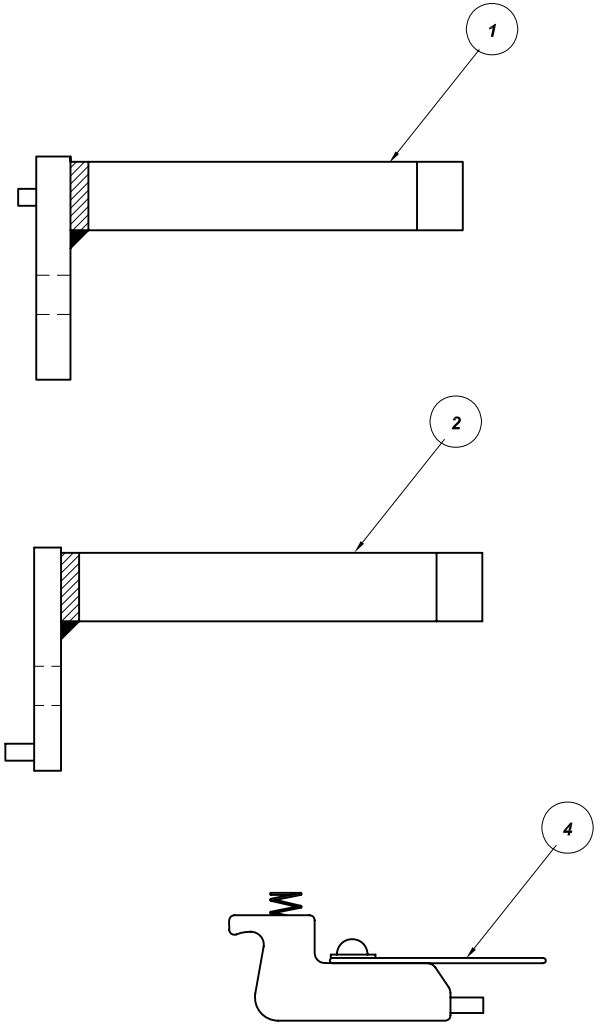

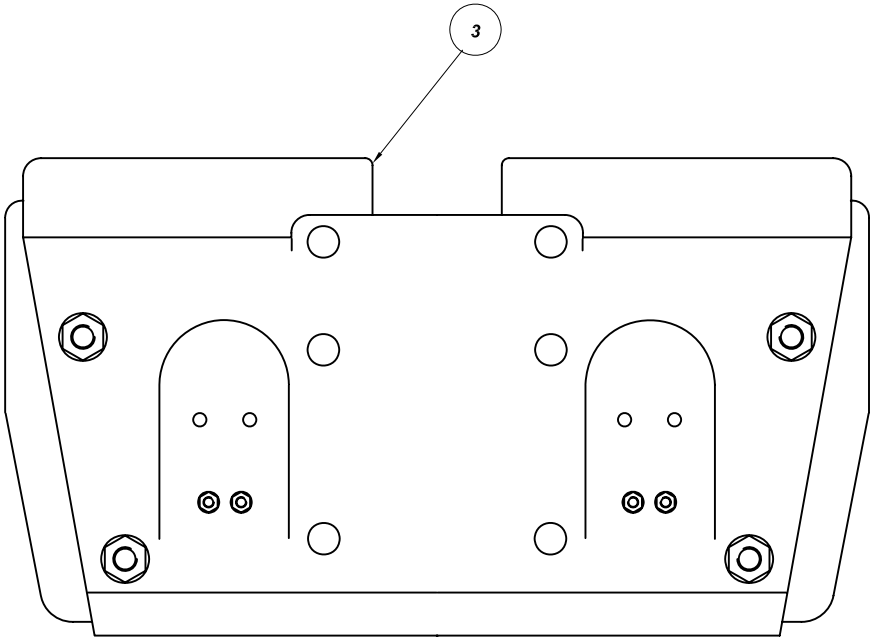

No	Revision notes	Date/Sig	No	Revision notes	Date/Sig	No	Revision notes	Date/Sig

Powerserve UK Limited
SERVING ELECTRICAL UTILITIES

Scale NTS Drawn ACS Checked AJT Approved AJT Date 10/03/10

TO CONTACT US
TEL: +44(0)1279-418630
FAX: +44(0)1279-210097
WEB: www.powerserveuk.com
EMAIL: info@powerserveuk.com

PATTERN CONTACTS FOR YORKSHIRE SWITCHGEAR TYPE IVIF13

RE No P872901 REV 0

Sheet No

Form No 3-7.3.6-A3 Rev B

TO CONTACT US - TEL: +44(0)1279-418630 WEB: www.powerserveuk.com EMAIL: info@powerserveuk.com

All information contained in this document is confidential and the copyright reserved

Used on dwg MANUAL

P872902

Quantity D	Quantity C	Quantity B	Quantity A	No	Description	Detail No		OEM Part No
				1	BLADE CONTACT-LARGE BASE	P872001/A		
				2	BLADE CONTACT-LARGE BASE	P872001/B		
				3	CONTACT FINGER (INC SPRINGS)	P872005/A		
				4	BLADE CONTACT-SMALL BASE	P872006/A		
				5	BLADE CONTACT-SMALL BASE	P872006/B		

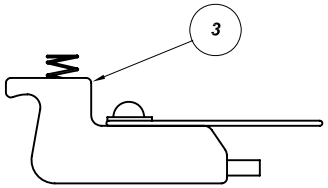

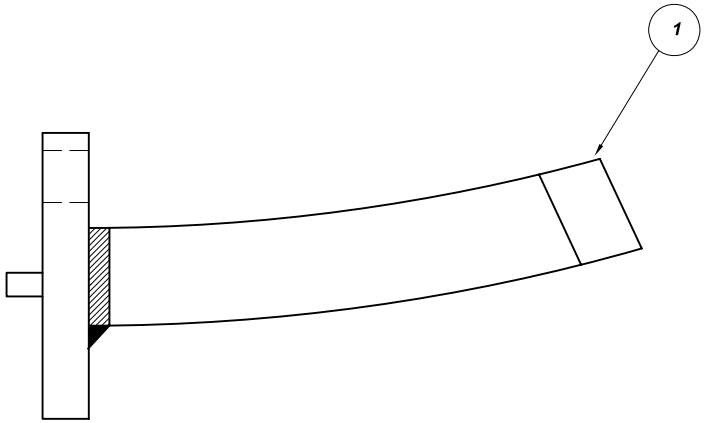

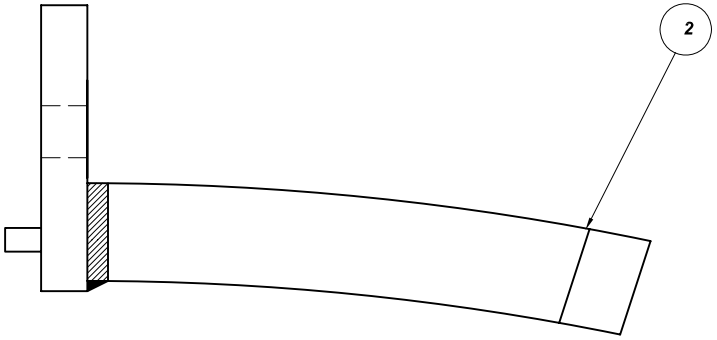

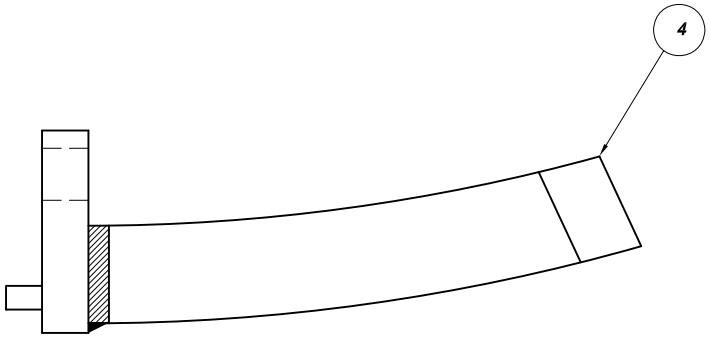

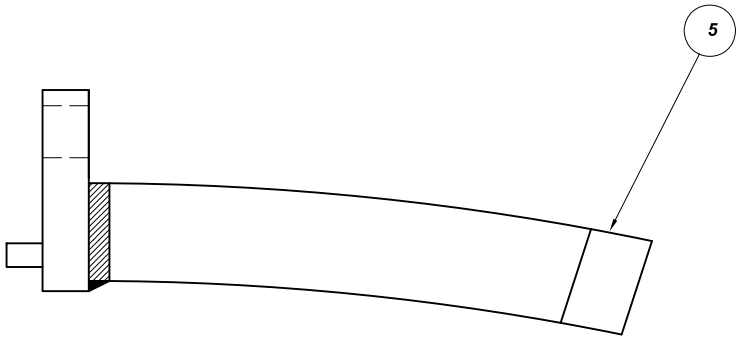

No	Revision notes	Date/Sig	No	Revision notes	Date/Sig	No	Revision notes	Date/Sig

Powerserve UK Limited

SERVING ELECTRICAL UTILITIES

TO CONTACT US
TEL: +44(0)1279-418630
FAX: +44(0)1279-210097
WEB: www.powerserveuk.com
EMAIL: info@powerserveuk.com

Scale NTS Drawn ACS Checked AJT Approved AJT Date 10/03/10

PATTERN CONTACTS FOR YORKSHIRE SWITCHGEAR TYPE SO-HI

RE No P872902 REV 0

Sheet No

Form No 3-7.3.6-A3 Rev B

TO CONTACT US - TEL: +44(0)1279-418630 WEB: www.powerserveuk.com EMAIL: info@powerserveuk.com

All information contained in this document is confidential and the copyright reserved

Used on dwg MANUAL

P872903

Quantity D	Quantity C	Quantity B	Quantity A	No	Description	Detail No		OEM Part No
				1	SIGHT GLASS	P872002/1		
				2	SIGHT GLASS GASKET	P872002/2		
				3	SIGHT GLASS PLATE	P872002/3		
				4	SIGHT GLASS PLATE GASKET	P872002/4		

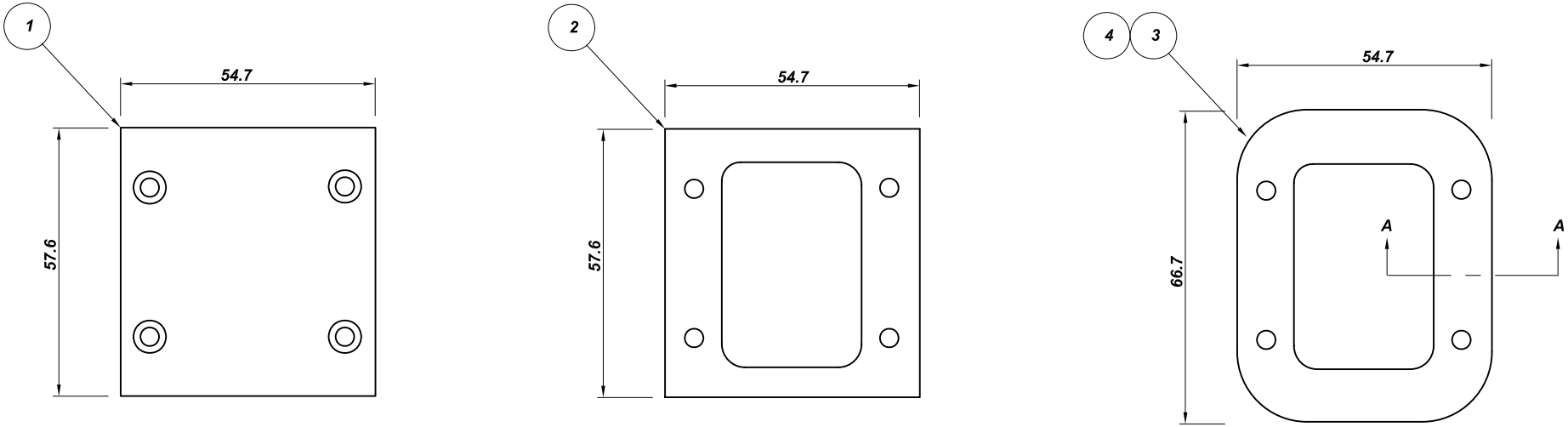

SECTION A-A
DETAIL 3 ONLY

No	Revision notes	Date/Sig	No	Revision notes	Date/Sig	No	Revision notes	Date/Sig

Powerserve UK Limited
SERVING ELECTRICAL UTILITIES

TO CONTACT US
TEL: +44(0)1279-418630
FAX: +44(0)1279-210097
WEB: www.powerserveuk.com
EMAIL: info@powerserveuk.com

Scale NTS | Drawn ACS | Checked AJT | Approved AJT | Date 10/03/10

PATTERN
SIGHT GLASS
AND GASKETS

RE No | Sheet No | P872903 | REV 0